The print –out is not subject to the modification service.

Intendet for internal and external use.

EN

DE: X | EN: X | ES: X | IT: X | PR: X | FR: X | RO: X

Preceding edition: 11.11.1993

Disassembly and pressure discharge of STABILUS products prior to disposal

Handwritten changes not permitted

Revision no. Name / Date	Revision specification:	Revision:
600591 Kannewurf 07.12.2012	new: pt. 2.14, other POWERISE	13
618856 Kannewurf 10.12.2014	Revision pt. 1 and pt. 2.3 Model: MULTI-STOP deleted	14
622261 Kannewurf 08.06.2015	Only English version - Point 1, Heading, new: General information disposal of STABILUS-PRODUCTS Old: General information on venting STABILUS-PRODUCTS	15
690330 Donat 04.08.2020	new: pt. 2.15, rotary damper	16
693362 Dederichs 18.02.2021	Revised: 2.13. POWERISE spindle drive with compression spring Newly inserted: 2.14. POWERISE spindle drive with tension spring and 2.15. POWERISE spindle drive Paradox Numbering of the following chapters adapted	17
712667 Dederichs 05.07.2022	new: point 2.18, Model: Gas damper	18
712816 Dederichs 19.07.2022	Revision: Item 2.5; Addition of device type III and device type IV New: Added item 2.6 Device type: Double pipe damper / STAB-O-SHOC Numbering of the following chapters adjusted	19
714113 Dederichs 20.09.2022	New: Pt. 2.20 Model: LOM X added	20

Drawn:	Technical release:	Management release:	Revision:
10.11.2000; A. Kannewurf	20.09.2022; Mi. Schneider	20.09.2022; H. Pomin	

We reserve all rights to this document, to any patents or patent registrations related hereto, and to the duplication, retransmission by third parties and misc. use. Any use of this document is not permitted without the written consent of STABILUS.

STABILUS GmbH
Wallersheimer Weg 100
D-56070 Koblenz
Postfach 201454, D-56014 Koblenz

Telefon: (0261) 8900-0
Telefax: (0261) 8900-204
E-Mail: Info@de.stabilus.com
http://www.stabilus.com

Disassembly and pressure discharge of STABILUS products prior to disposal

Document-No.
STAB-Spec. 10009375
Page 1
Ident. Doc.: SN 03.10-00/13

The print-out is not subject to the modification service.
Intended for internal and external use.

EN

DE: X | EN: X | ES: X | IT: X | PR:X | FR: X | RO: X
Preceding edition: 11.11.1993

Content

1. GENERAL INFORMATION DISPOSAL OF STABILUS PRODUCTS 2
2. Special instructions for the individual models 3
2.1. Model: LIFT-O-MAT/INTER-STOP 3
2.2. Model: LIFT-O-MAT telescopic leg 4
2.3. Model: LIFT-O-MAT with interior valve (TCV) 6
2.4. Model: BLOC-O-LIFT 7
2.5. Model: Damper / STAB-O-SHOC 8
2.6. Model: Double-tube Damper / STAB-O-SHOC 12
2.7. Model: STAB-O-MAT 13
2.8. Model: STAB-O-MAT / STAB-O-BLOC telescopic column 16
2.9. Model: STAB-O-BLOC column 17
2.10. Model: HYDRO-BLOC 19
2.11. Model: HYDRO-LIFT 20
2.12. Model: DORSTOP 21
2.13. Model: DORSTOP-console 22
2.14. Model: POWERISE Spindle Drive with pressure spring 23
2.15. Model: POWERISE Spindle Drive with tension spring 25
2.16. Model: POWERISE Spindle drive paradox 26
2.17. Model: other POWERISE 27
2.17.1. Disposal of POWERISE bowden cable system with Dorstop 27
2.17.2. Disposal of POWERISE with Direct Drive 28
2.17.3. Disposal of POWERISE bowden cable system with Lift-o-Mat 29
2.18. Model: Rotary Damper 30
2.19. Model: Gas damper 31
2.20. Model: LOM X 32

Rev.: 20

We reserve all rights to this document, to any patents or patent registrations related hereto, and to the duplication, retransmission by third parties and misc. use. Any use of this document is not permitted without the written consent of STABILUS.

STABILUS GmbH
Wallersheimer Weg 100
D-56070 Koblenz
Postfach 201454, D-56014 Koblenz

Telefon: (0261) 8900-0
Telefax: (0261) 8900-204
E-Mail: Info@de.stabilus.com
http://www.stabilus.com

The print-out is not subject to the modification service.
Intended for internal and external use.

Disassembly and pressure discharge of STABILUS products prior to disposal

1. GENERAL INFORMATION DISPOSAL OF STABILUS PRODUCTS

Highly pressurized products can be potentially dangerous. In order to eliminate these potential dangers, the gas springs and dampers to be disposed must be immediately, i.e. without (temporary) storage, degased according to the instructions in this Stabilus-specification.

During degasing the following general considerations as well as the special degasing instructions for the respective product types according to point 2.1 et seq must be observed. Disregard of these instructions can be hazardous.

In generall the following applies:

1. The pressure tube must be clamped between two V-blocks without being deformed and in such a way that dimension X is at least 25mm (see point 2.1 et seq). For STAB-O-MAT and STAB-O-MAT columns the entire pressure tube may be clamped.
2. To degas, the pressure tube must be either slowly sawed open with a H A N D S A W or drilled open with a D R I L L B I T roughly 3mm in diameter at the specified location.
3. Due to the high internal pressure it is possible for metal shavings and/or oil to spray out from the sawing or drilling location. Therefore the necessary personal protection (eye and face protection, covering the sawing location) should be applied before sawing or drilling.
4. For lockable product the locking mechanism must be opened by actuating the release pin until the piston rod has been completely extended. After degasing actuate the release pin a second time to exhaust any remaining gas pressure in the product. Observe the necessary safety precautions according to Pt. 3.
5. DORSTOP products must be completely extended before degassing
6. The unpressurized product must be disposed of according to waste management laws. Gas springs and dampers are filled with oil. Waste oil must be disposed of according to waste management laws. Do not allow waste products into soil or natural bodies of water.

- If disposal according to these regulations or the accurate identification of the product (according to Point 2.1 et seq) is not possible, it is recommended to consult with the supplying plant.

EN
DE: X | EN: X | ES: X | IT: X | PR:X | FR: X | RO: X
Preceding edition: 11.11.1993

We reserve all rights to this document, to any patents or patent registrations related hereto, and to the duplication, retransmission by third parties and misc. use. Any use of this document is not permitted without the written consent of STABILUS.

STABILUS GmbH
Wallersheimer Weg 100
D-56070 Koblenz
Postfach 201454, D-56014 Koblenz
Telefon: (0261) 8900-0
Telefax: (0261) 8900-204
E-Mail: Info@de.stabilus.com
http://www.stabilus.com

The print-out is not subject to the modification service.

Intended for internal and external use.

Disassembly and pressure discharge of STABILUS products prior to disposal

2. Special instructions for the individual models

2.1. Model: LIFT-O-MAT/INTER-STOP

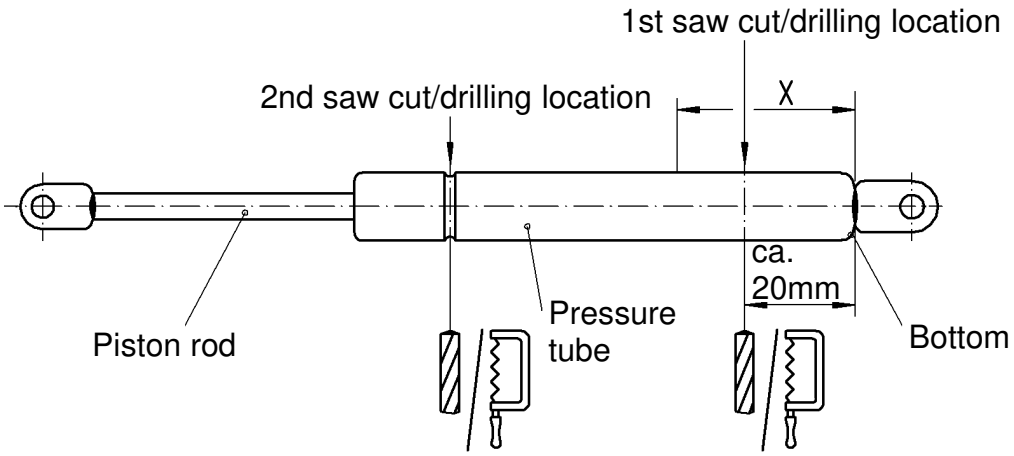

1st saw cut/drilling location: Saw or drill the pressure tube about 20 mm from the bottom.
2nd saw cut/drilling location: Saw or drill in the radial groove.

EN

DE: X | EN: X | ES: X | IT: X | PR: X | FR: X | RO: X

Preceding edition: 11.11.1993

We reserve all rights to this document, to any patents or patent registrations related hereto, and to the duplication, retransmission by third parties and misc. use. Any use of this document is not permitted without the written consent of STABILUS.

STABILUS GmbH
Wallersheimer Weg 100
D-56070 Koblenz
Postfach 201454, D-56014 Koblenz

Telefon: (0261) 8900-0
Telefax: (0261) 8900-204
E-Mail: Info@de.stabilus.com
http://www.stabilus.com

The print-out is not subject to the modification service.
Intended for internal and external use.

Disassembly and pressure discharge of STABILUS products prior to disposal

2.2. Model: LIFT-O-MAT telescopic leg

The following 3 steps must be carried out in the indicated sequence.

Step 1:

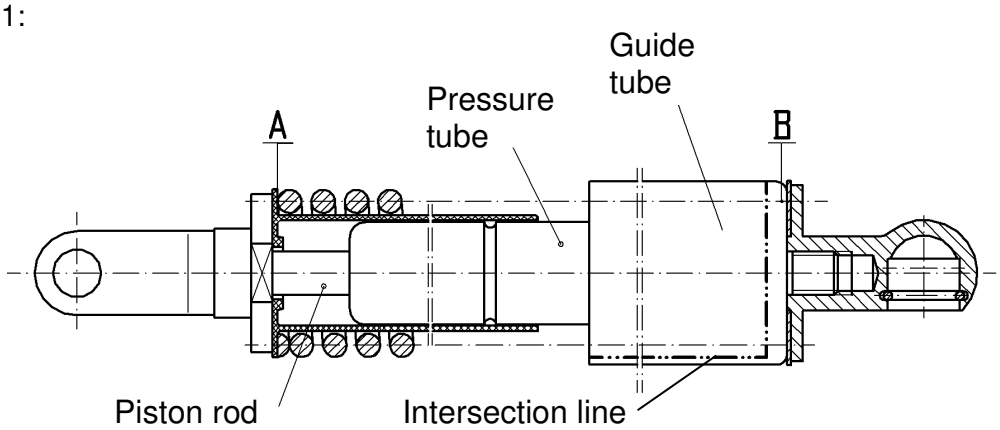

Cut open the guide tube lengthwise using a suitable cutting tool (e.g. knife) and remove by opening the tube to expose the coil spring completely.

CAUTION!
The mechanical spring is pre-loaded between positioning points A and B

Step 2:

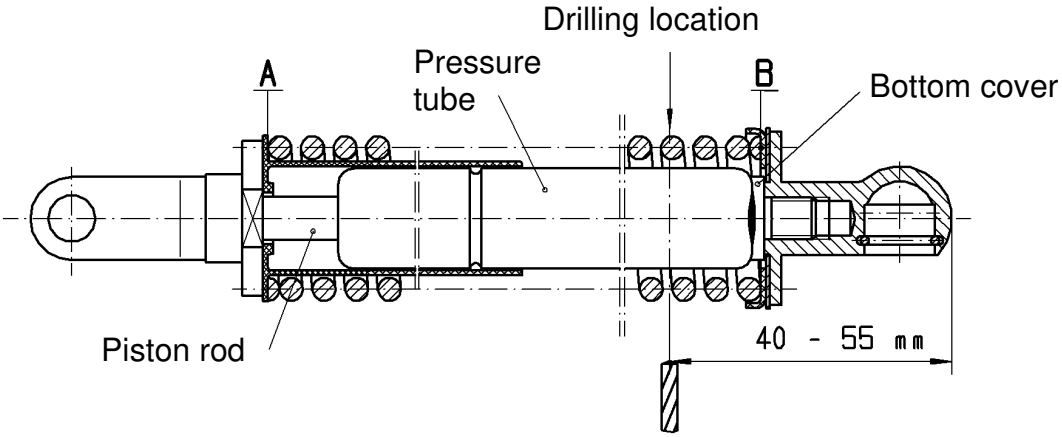

Drilling location: Open by drilling the pressure tube between the coils of the mechanical spring at a range of 40 - 55 mm.

CAUTION!
The mechanical spring is pre-loaded between positioning points A and B.

We reserve all rights to this document, to any patents or patent registrations related hereto, and to the duplication, retransmission by third parties and misc. use. Any use of this document is not permitted without the written consent of STABILUS.

STABILUS GmbH
Wallersheimer Weg 100
D-56070 Koblenz
Postfach 201454, D-56014 Koblenz
Telefon: (0261) 8900-0
Telefax: (0261) 8900-204
E-Mail: Info@de.stabilus.com
http://www.stabilus.com

The print-out is not subject to the modification service.

Intended for internal and external use.

Disassembly and pressure discharge of STABILUS products prior to disposal

Step 3:

- Clamp the complete device by way of the mechanical spring in a vice with prism jaws.

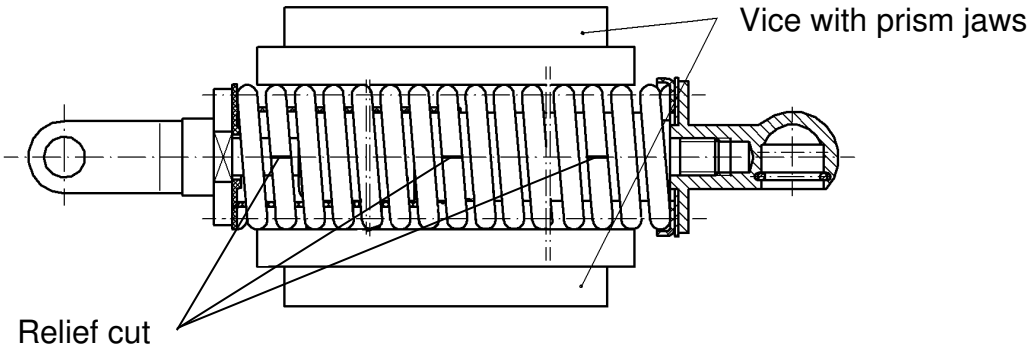

- In at least 3 locations sever the coils of the mechanical spring using an angle grinder with a cut-off wheel. Make sure the relief cuts are parallel to the gas spring axis. If possible after each relief cut turn the spring coils (clockwise) into one another.

- Turn the spring sections into one another until the pre-load has been eliminated.

CAUTION!
When severing the spring coils beware of sudden impact force on the cut-off wheel. Severing the coils may only be performed by qualified personnel. Observe the safety instructions!

We reserve all rights to this document, to any patents or patent registrations related hereto, and to the duplication, retransmission by third parties and misc. use. Any use of this document is not permitted without the written consent of STABILUS.

STABILUS GmbH
Wallersheimer Weg 100
D-56070 Koblenz
Postfach 201454, D-56014 Koblenz

Telefon: (0261) 8900-0
Telefax: (0261) 8900-204
E-Mail: Info@de.stabilus.com
http://www.stabilus.com

The print-out is not subject to the modification service.

Intended for internal and external use.

Disassembly and pressure discharge of STABILUS products prior to disposal

2.3. Model: LIFT-O-MAT with interior valve (TCV)

Variant I: LIFT-O-MAT with two single grooves

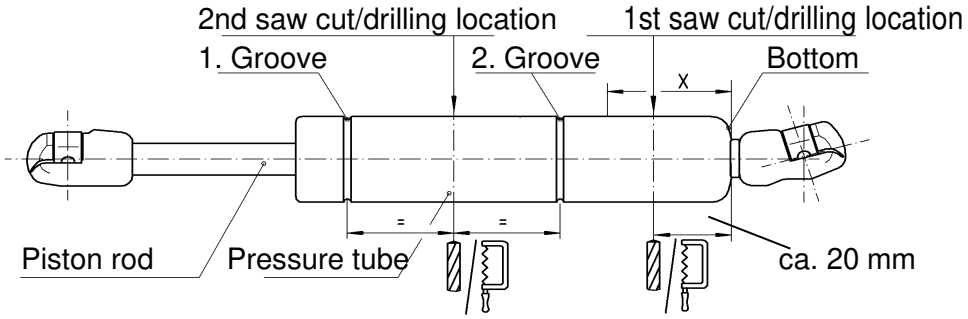

Variant II: LIFT-O-MAT with single and double groove

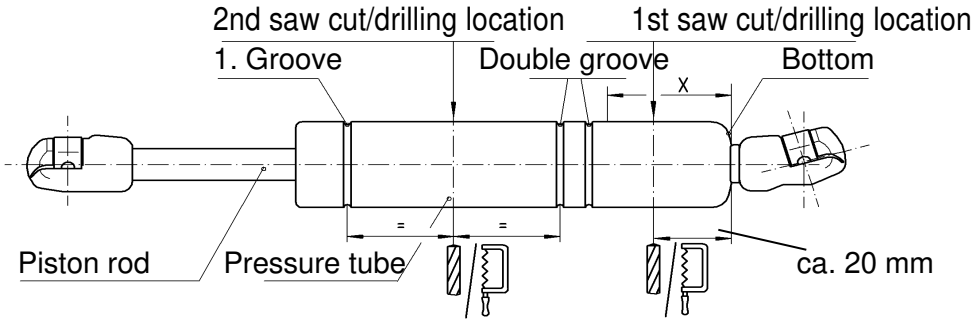

Variant III: LIFT-O-MAT with two single grooves covered by black label

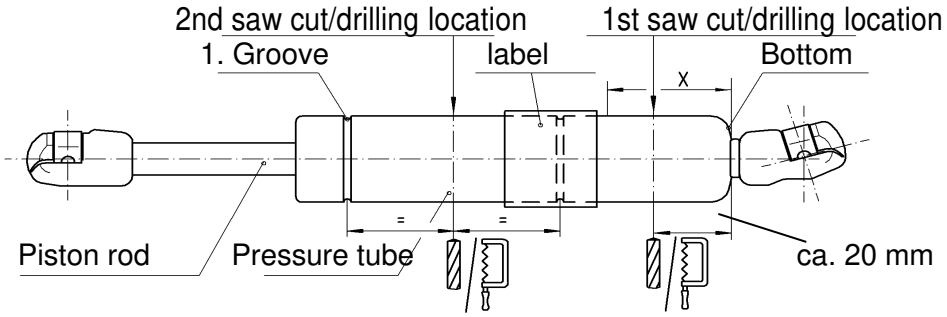

Observe the sequence!

1st saw cut/drilling location: Saw or drill the outer pressure tube about 20 mm from the bottom.
2nd saw cut/drilling location: Saw or drill in the area between the first radial groove and the second radial groove / double radial groove / label.

We reserve all rights to this document, to any patents or patent registrations related hereto, and to the duplication, retransmission by third parties and misc. use. Any use of this document is not permitted without the written consent of STABILUS.

STABILUS GmbH
Wallersheimer Weg 100
D-56070 Koblenz
Postfach 201454, D-56014 Koblenz

Telefon: (0261) 8900-0
Telefax: (0261) 8900-204
E-Mail: Info@de.stabilus.com
http://www.stabilus.com

The print-out is not subject to the modification service.

Intended for internal and external use.

Disassembly and pressure discharge of STABILUS products prior to disposal

2.4. Model: BLOC-O-LIFT

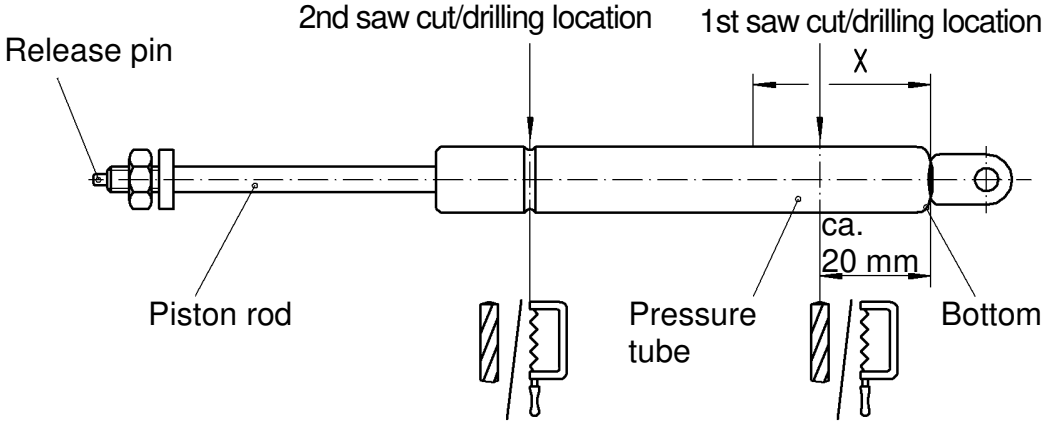

<u>1st saw cut/drilling location:</u> Saw or drill the pressure tube about 20 mm from the bottom.
<u>2nd saw cut/drilling location:</u> Saw or drill in the radial groove.

EN

DE: X | EN: X | ES: X | IT: X | PR:X | FR: X | RO: X

Preceding edition: 11.11.1993

We reserve all rights to this document, to any patents or patent registrations related hereto, and to the duplication, retransmission by third parties and misc. use. Any use of this document is not permitted without the written consent of STABILUS.

STABILUS GmbH
Wallersheimer Weg 100
D-56070 Koblenz
Postfach 201454, D-56014 Koblenz

Telefon: (0261) 8900-0
Telefax: (0261) 8900-204
E-Mail: Info@de.stabilus.com
http://www.stabilus.com

The print-out is not subject to the modification service.

Intended for internal and external use.

Disassembly and pressure discharge of STABILUS products prior to disposal

2.5. Model: Damper / STAB-O-SHOC
I Damper / STAB-O-SHOC
II Damper / STAB-O-SHOC Telescopic leg
III Damper / STAB-O-SCHOC with self-centering function in cover tube
IV Damper / STAB-O-SHOC with internal self-centering function

I Damper / STAB-O-SHOC

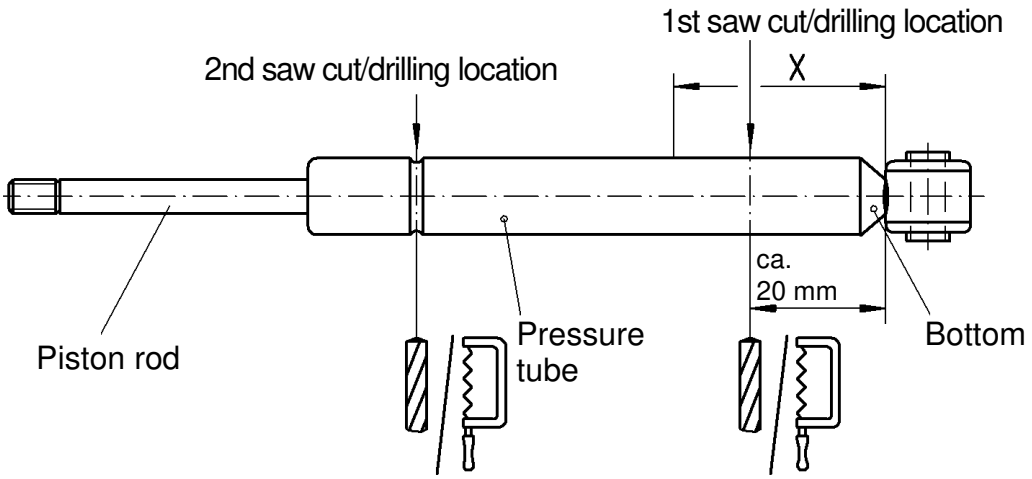

<u>1st saw cut/drilling location:</u> Saw or drill the pressure tube about 20 mm from the bottom.
<u>2nd saw cut/drilling location:</u> Saw or drill the pressure tube in the radial groove.

II Damper / STAB-O-SHOC telescopic leg: see point 2.2

EN

DE: X | EN: X | ES: X | IT: X | PR:X | FR: X | RO: X

Preceding edition: 11.11.1993

We reserve all rights to this document, to any patents or patent registrations related hereto, and to the duplication, retransmission by third parties and misc. use. Any use of this document is not permitted without the written consent of STABILUS.

STABILUS GmbH
Wallersheimer Weg 100
D-56070 Koblenz
Postfach 201454, D-56014 Koblenz

Telefon: (0261) 8900-0
Telefax: (0261) 8900-204
E-Mail: Info@de.stabilus.com
http://www.stabilus.com

The print-out is not subject to the modification service.

Intended for internal and external use.

Disassembly and pressure discharge of STABILUS products prior to disposal

III Damper STAB-O-SHOC with self centering function in cover tube

The following steps must be carried out in the indicated sequence.

Step 1:

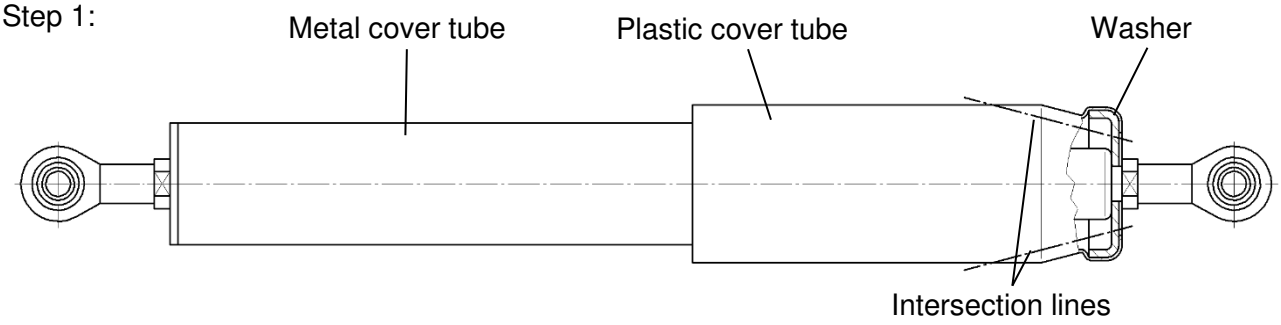

Remove the plastic cover by applying a load and twisting motion to remove. Alternative is to use a suitable cutting tool (e.g. knife) to cut plastic tube at washer end to expand tabs over metal washer

Step 2:

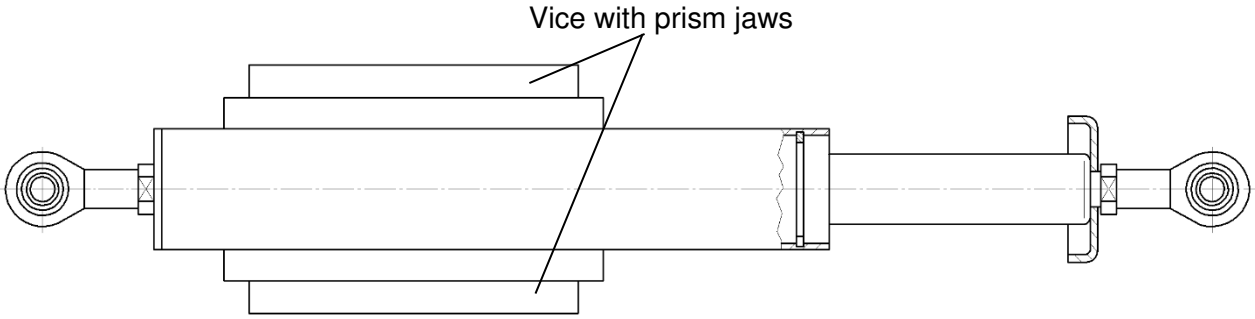

Fix metal tube in suitable fixture (e.g. vice). Unthread endfitting at end of metal tube with wrench

Step 3:

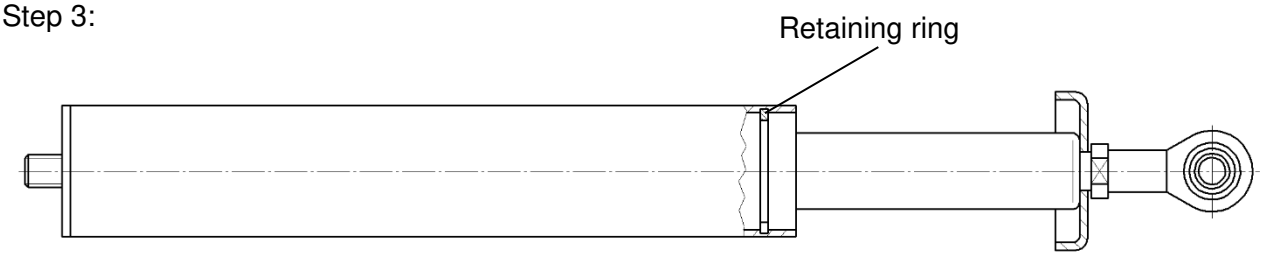

Going to the open end of the metal tube you can see the internal retaining ring. Remove the larger of the two retaining rings. With the endfitting and opposite side retaining ring removed the outer metal tube can be removed. This will expose the mechanical springs and bushings.

We reserve all rights to this document, to any patents or patent registrations related hereto, and to the duplication, retransmission by third parties and misc. use. Any use of this document is not permitted without the written consent of STABILUS.

STABILUS GmbH
Wallersheimer Weg 100
D-56070 Koblenz
Postfach 201454, D-56014 Koblenz

Telefon: (0261) 8900-0
Telefax: (0261) 8900-204
E-Mail: Info@de.stabilus.com
http://www.stabilus.com

The print-out is not subject to the modification service.

Intended for internal and external use.

Disassembly and pressure discharge of STABILUS products prior to disposal

Step 4:

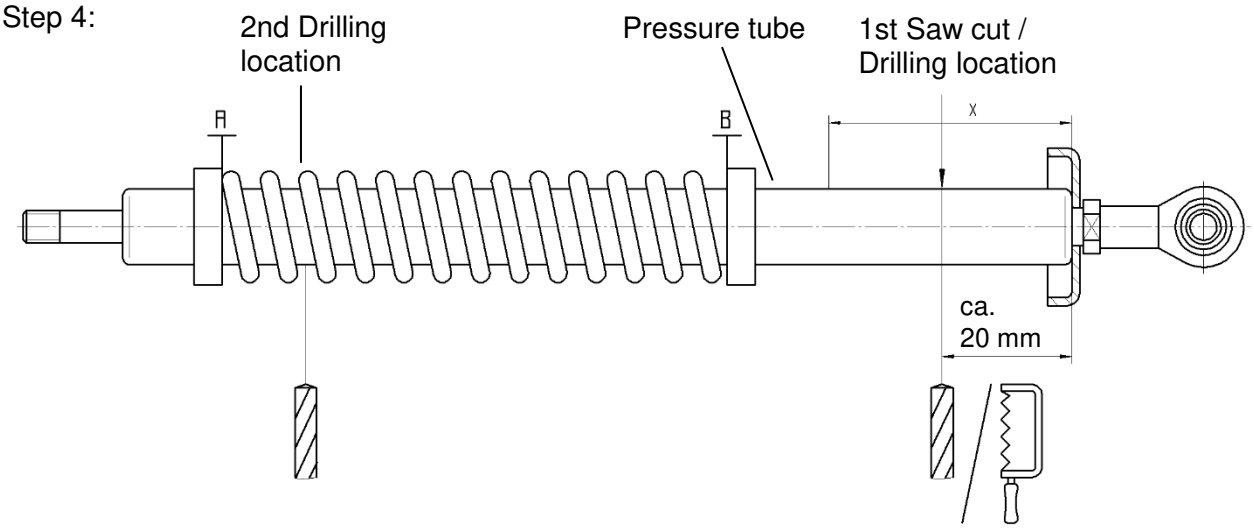

1st saw cut/drilling location: Saw or drill the pressure tube about 20 mm from the bottom.
2nd drilling location: Drilling the pressure tube between the coils of the mechanical spring

CAUTION! The mechanical spring can pre-loaded between positioning points A and B.

Step 5:

- Clamp the complete device by way of the mechanical spring in a vice with prism jaws.

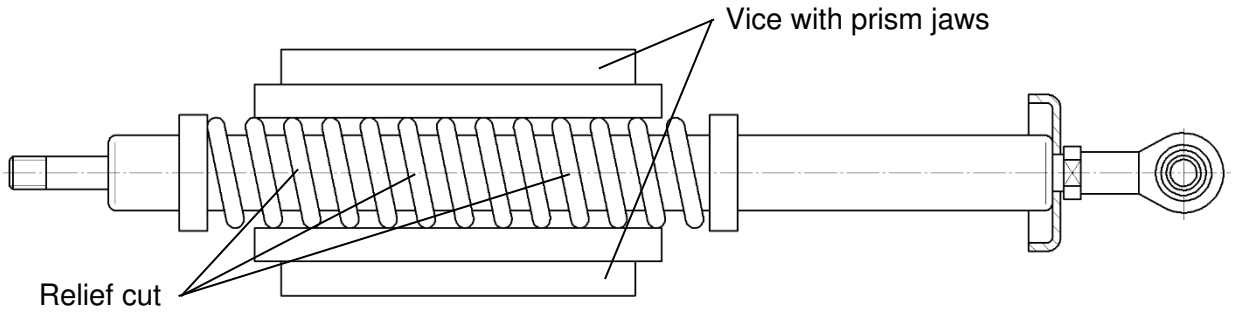

- In at least 3 locations sever the coils of the mechanical spring using an angle grinder with a cut-off wheel. Make sure the relief cuts are parallel to the damper axis. If possible after each relief cut turn the spring coils (clockwise) into one another.

- Turn the spring sections into one another until the pre-load has been eliminated.

CAUTION!
When severing the spring coils beware of sudden impact force on the cut-off wheel. Severing the coils may only be performed by qualified personnel. Observe the safety instructions!

We reserve all rights to this document, to any patents or patent registrations related hereto, and to the duplication, retransmission by third parties and misc. use. Any use of this document is not permitted without the written consent of STABILUS.

STABILUS GmbH
Wallersheimer Weg 100
D-56070 Koblenz
Postfach 201454, D-56014 Koblenz

Telefon: (0261) 8900-0
Telefax: (0261) 8900-204
E-Mail: Info@de.stabilus.com
http://www.stabilus.com

The print-out is not subject to the modification service.

Intended for internal and external use.

EN

DE: X | EN: X | ES: X | IT: X | PR:X | FR: X | RO: X

Preceding edition: 11.11.1993

Disassembly and pressure discharge of STABILUS products prior to disposal

IV Damper / STAB-O-SHOC with internal self-centering function

Identification: Variant with 3 grooves, where the distance between groove 2 and 3 (counted from rod side) is more than 25 mm

Step 1:

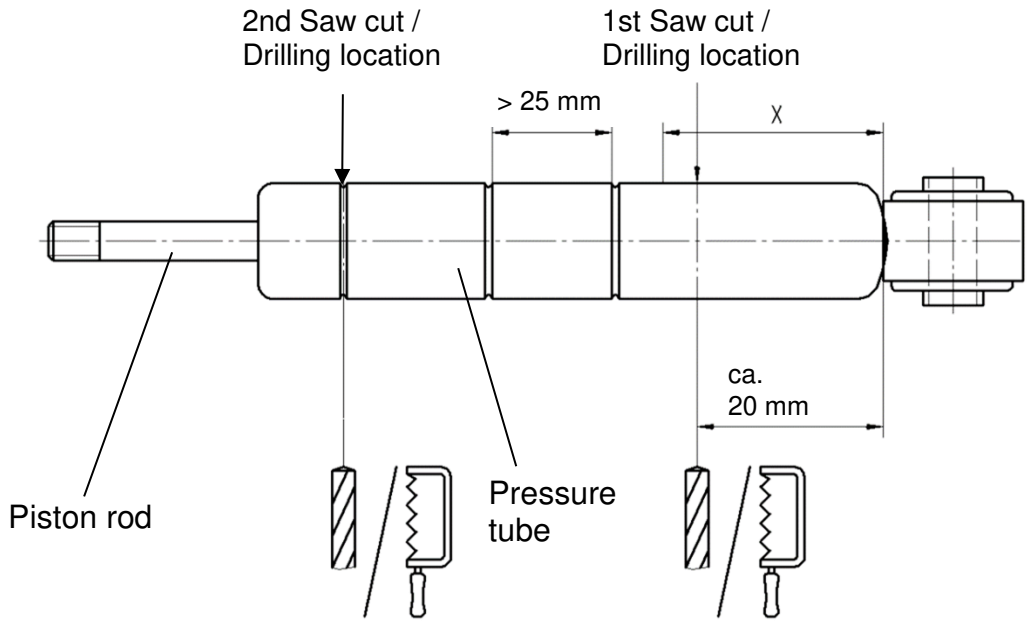

Step 2:

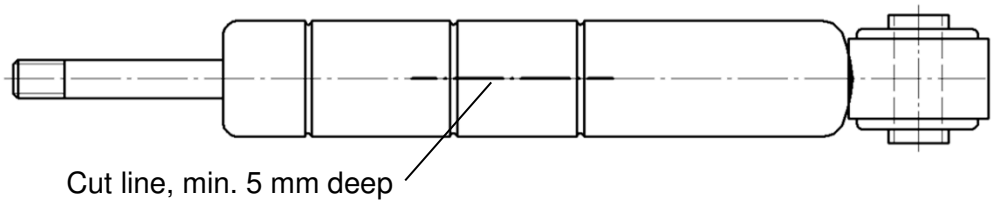

Cut through the steel tube and mechanical spring using angle grinder with a cutting disc, cutting depth at least 5 mm. Carry out the separating cut parallel to the damper length axis until and beyond the 2 grooves.

ATTENTION!
Mechanical spring is pre-tensioned inside the steel tube.

ATTENTION!
When cutting through the spring coils, sudden impact load on the cutting disc.
Cutting work may only be carried out by qualified personnel.
Observe safety regulations!

We reserve all rights to this document, to any patents or patent registrations related hereto, and to the duplication, retransmission by third parties and misc. use. Any use of this document is not permitted without the written consent of STABILUS.

STABILUS GmbH
Wallersheimer Weg 100
D-56070 Koblenz
Postfach 201454, D-56014 Koblenz

Telefon: (0261) 8900-0
Telefax: (0261) 8900-204
E-Mail: Info@de.stabilus.com
http://www.stabilus.com

The print-out is not subject to the modification service.

Intended for internal and external use.

EN

DE: X | EN: X | ES: X | IT: X | PR:X | FR: X | RO: X

Preceding edition: 11.11.1993

2.6. Model: Double-tube Damper / STAB-O-SHOC

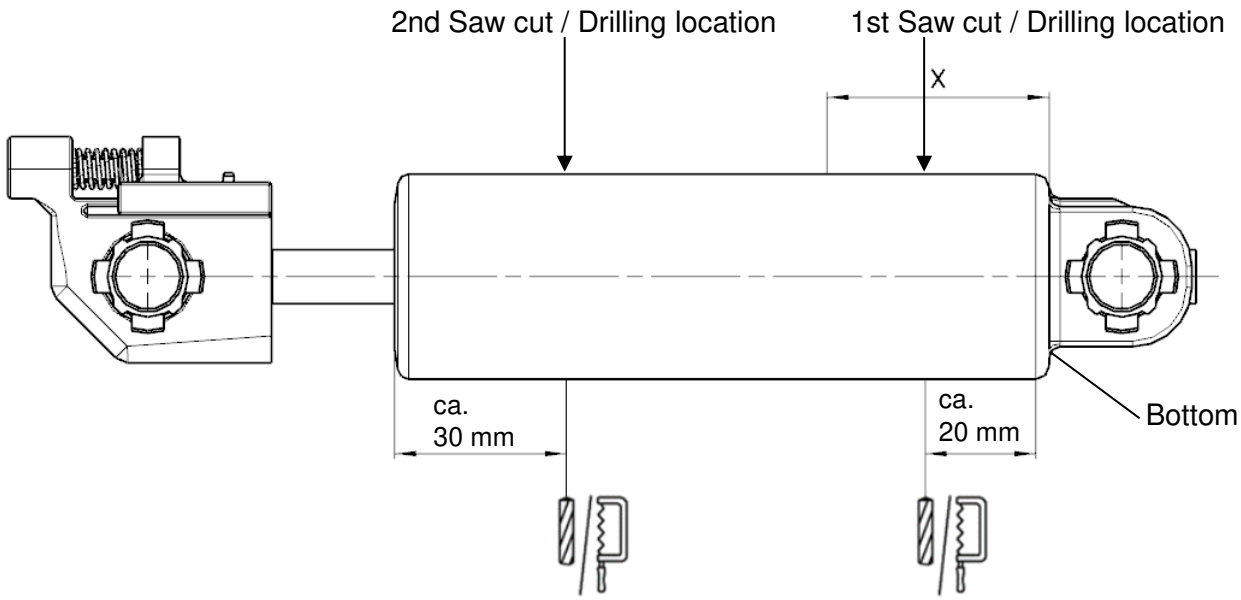

1st saw cut/drilling location: Saw or drill the outer cover tube and inner pressure tube about 20 mm from the bottom

2nd saw cut/drilling location: Saw or drill the outer cover tube and inner pressure tube about 30 mm from the rod side end

We reserve all rights to this document, to any patents or patent registrations related hereto, and to the duplication, retransmission by third parties and misc. use. Any use of this document is not permitted without the written consent of STABILUS.

STABILUS GmbH
Wallersheimer Weg 100
D-56070 Koblenz
Postfach 201454, D-56014 Koblenz

Telefon: (0261) 8900-0
Telefax: (0261) 8900-204
E-Mail: Info@de.stabilus.com
http://www.stabilus.com

The print-out is not subject to the modification service.
Intended for internal and external use.

Disassembly and pressure discharge of STABILUS products prior to disposal

2.7. Model: STAB-O-MAT

Attention! For double tube products, the depth of cut must be at least 7 mm.

a) Interior release pin

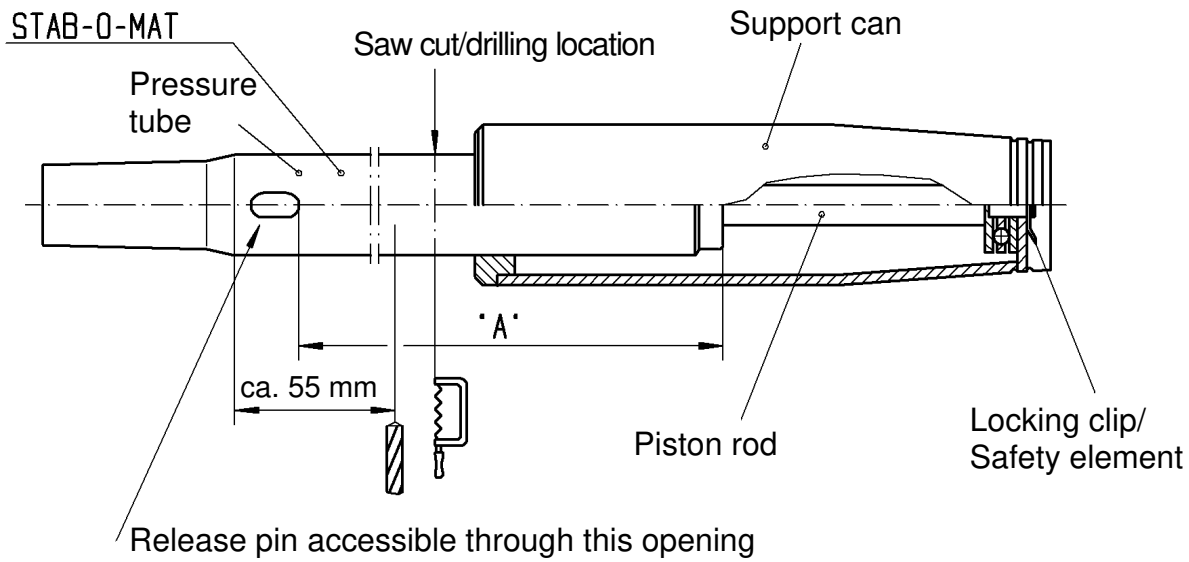

b) Outside release pin

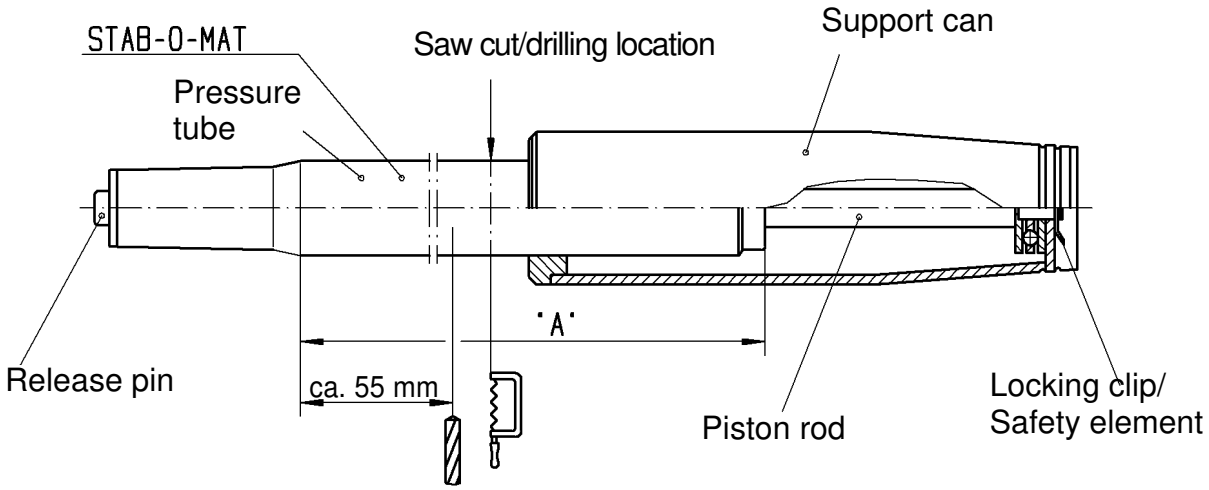

- Disassemble STAB-O-MAT column (remove locking clip /safety element and pull off support can).
- Version with internal release: actuate release pin with corresponding release lever.

Saw cut: Saw open the pressure tube in the middle of area "A". or
Drilling location: Drill the pressure tube open about 55 mm from cone.

We reserve all rights to this document, to any patents or patent registrations related hereto, and to the duplication, retransmission by third parties and misc. use. Any use of this document is not permitted without the written consent of STABILUS.

STABILUS GmbH
Wallersheimer Weg 100
D-56070 Koblenz
Postfach 201454, D-56014 Koblenz
Telefon: (0261) 8900-0
Telefax: (0261) 8900-204
E-Mail: Info@de.stabilus.com
http://www.stabilus.com

The print-out is not subject to the modification service.
Intended for internal and external use.

Disassembly and pressure discharge of STABILUS products prior to disposal

c) Separate guide bushing from support can

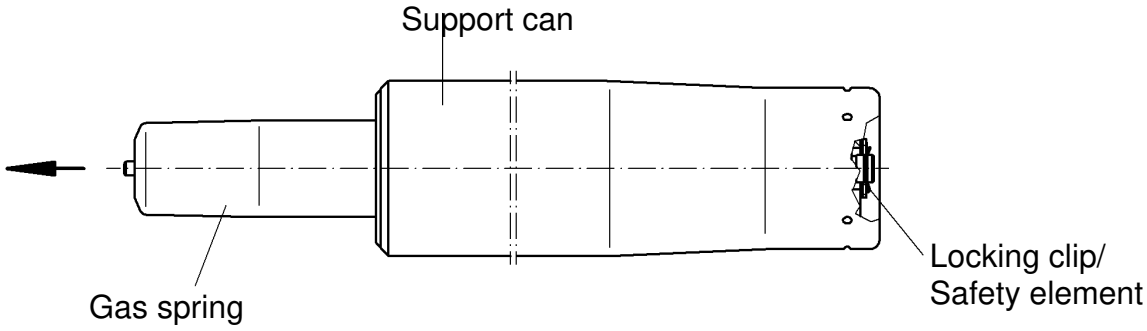

Disassemble STAB-O-MAT column (remove locking clip /safety element and pull off support can).

Disassemble pinned guide bushing

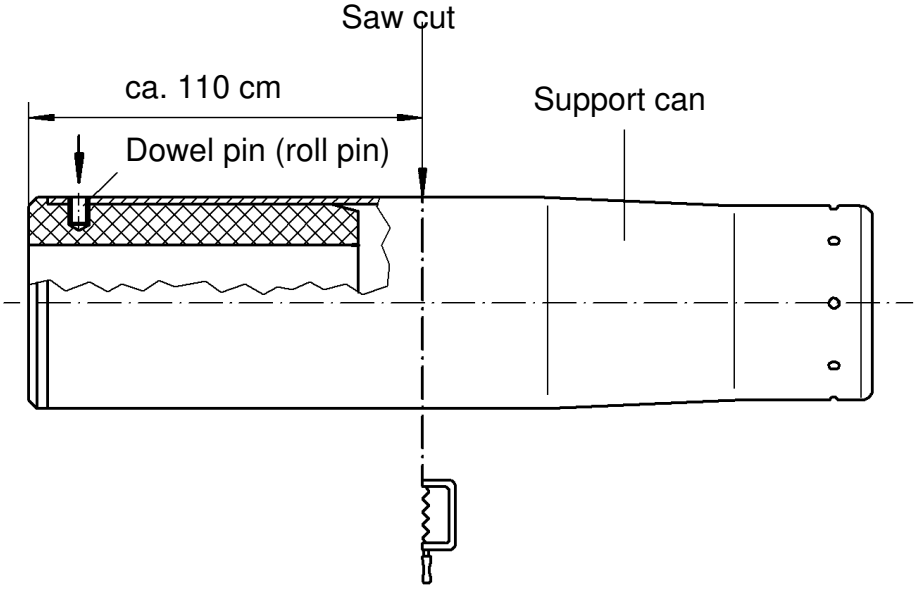

Cut/saw support can 110 mm from the top edge. Clamp the cut tube piece including guide bushing, with dowel pin (roll pin) pointing up wards.
Using a punch, knock the dowel pin (roll pin) inwards through the guide bushing. Repeat this step for devices with two dowel pin (roll pin).
Use a punch to knock the guide bushing out of the outer tube.

EN
DE: X | EN: X | ES: X | IT: X | PR:X | FR: X | RO: X
Preceding edition: 11.11.1993

We reserve all rights to this document, to any patents or patent registrations related hereto, and to the duplication, retransmission by third parties and misc. use. Any use of this document is not permitted without the written consent of STABILUS.

STABILUS GmbH
Wallersheimer Weg 100
D-56070 Koblenz
Postfach 201454, D-56014 Koblenz

Telefon: (0261) 8900-0
Telefax: (0261) 8900-204
E-Mail: Info@de.stabilus.com
http://www.stabilus.com

The print-out is not subject to the modification service.

Intended for internal and external use.

EN

DE: X | EN: X | ES: X | IT: X | PR:X | FR: X | RO: X

Preceding edition: 11.11.1993

Disassembly and pressure discharge of STABILUS products prior to disposal

Disassemble guide bushing secured with roll closed lip:

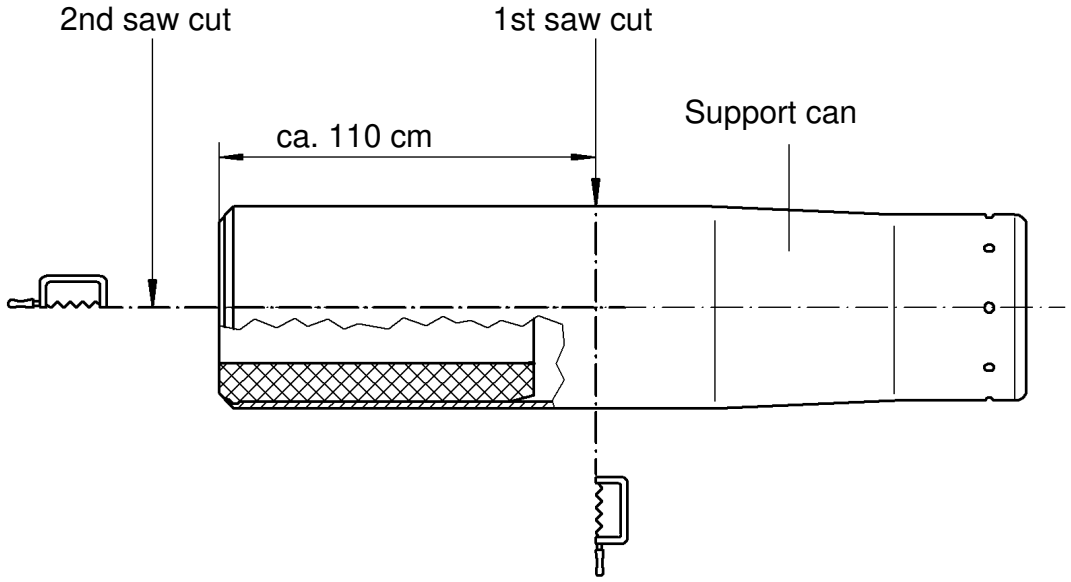

1st saw cut: Cut support can approx. 110 mm from the top edge.
2nd saw cut: Cut support can and guide bushing longitudinally.
Knock guide bushing out of support can.

Rev.: 20

We reserve all rights to this document, to any patents or patent registrations related hereto, and to the duplication, retransmission by third parties and misc. use. Any use of this document is not permitted without the written consent of STABILUS.

STABILUS GmbH
Wallersheimer Weg 100
D-56070 Koblenz
Postfach 201454, D-56014 Koblenz

Telefon: (0261) 8900-0
Telefax: (0261) 8900-204
E-Mail: Info@de.stabilus.com
http://www.stabilus.com

The print-out is not subject to the modification service.

Intended for internal and external use.

Disassembly and pressure discharge of STABILUS products prior to disposal

2.8. Model: STAB-O-MAT / STAB-O-BLOC telescopic column

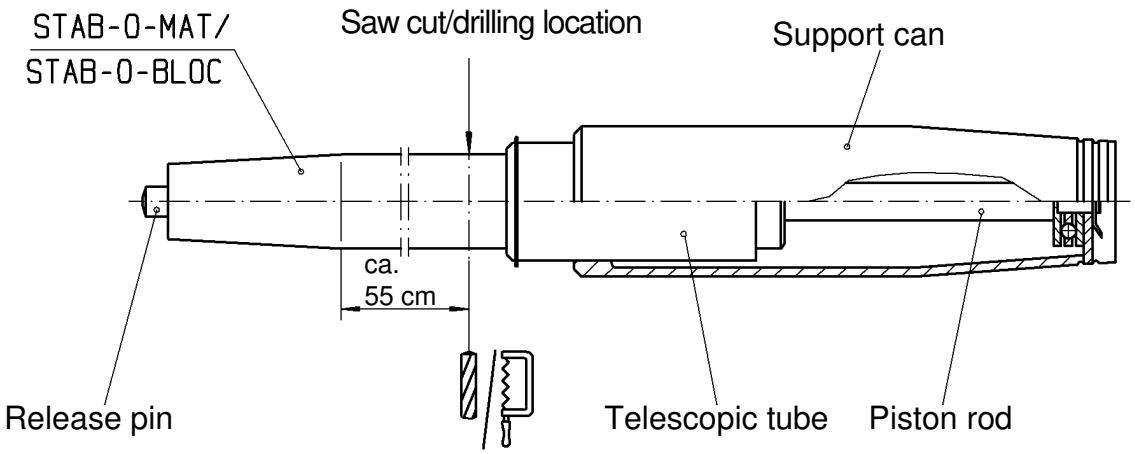

- Press the release pin and completely extend the column.
- Version with internal release: actuate release pin with corresponding release lever.

Saw cut/drilling location: Saw or drill the pressure tube about 55 mm from cone.

EN

DE: X | EN: X | ES: X | IT: X | PR:X | FR: X | RO: X

Preceding edition: 11.11.1993

We reserve all rights to this document, to any patents or patent registrations related hereto, and to the duplication, retransmission by third parties and misc. use. Any use of this document is not permitted without the written consent of STABILUS.

STABILUS GmbH
Wallersheimer Weg 100
D-56070 Koblenz
Postfach 201454, D-56014 Koblenz

Telefon: (0261) 8900-0
Telefax: (0261) 8900-204
E-Mail: Info@de.stabilus.com
http://www.stabilus.com

Disassembly and pressure discharge of STABILUS products prior to disposal

The print-out is not subject to the modification service.
Intended for internal and external use.

2.9. Model: STAB-O-BLOC column
Model: I STAB-O-BLOC column
Model: II STAB-O-BLOC telescopic
Model: III STAB-O-BLOC

I STAB-O-BLOC column

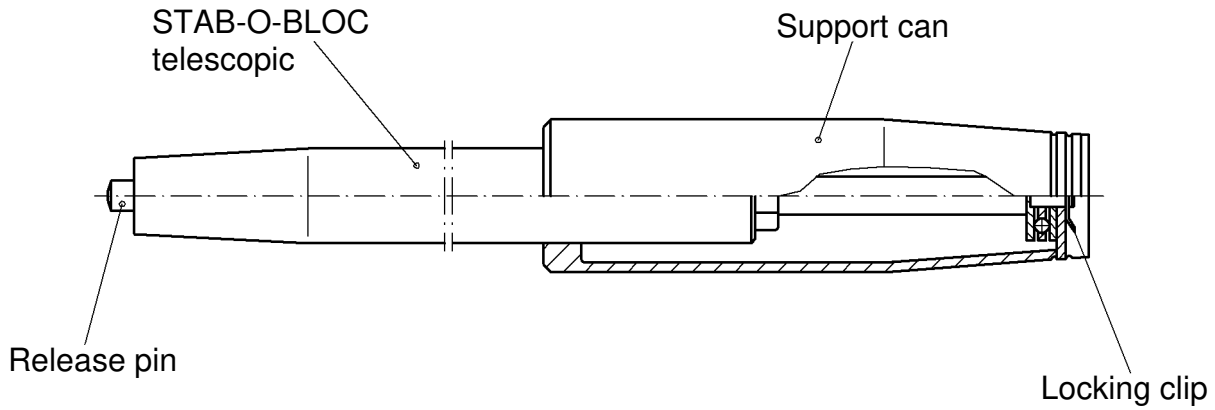

- Remove locking clip
- Pull the STAB-O-BLOC out of the support can.

II STAB-O-BLOC telescopic

a) removable connection
- carrying tube with STAB-O-BLOC and fastening screw

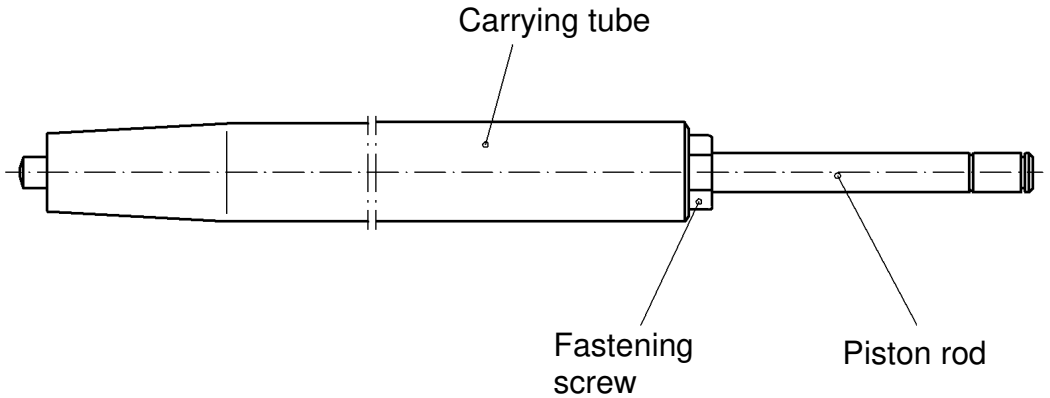

- unscrew fastening screw
- take out STAB-O-BLOC
- degas see Pt. III

We reserve all rights to this document, to any patents or patent registrations related hereto, and to the duplication, retransmission by third parties and misc. use. Any use of this document is not permitted without the written consent of STABILUS.

STABILUS GmbH
Wallersheimer Weg 100
D-56070 Koblenz
Postfach 201454, D-56014 Koblenz

Telefon: (0261) 8900-0
Telefax: (0261) 8900-204
E-Mail: Info@de.stabilus.com
http://www.stabilus.com

The print-out is not subject to the modification service.
Intended for internal and external use.

Disassembly and pressure discharge of STABILUS products prior to disposal

b) non removable connection
- carrying tube with STAB-O-BLOC by dinks on carrying tube

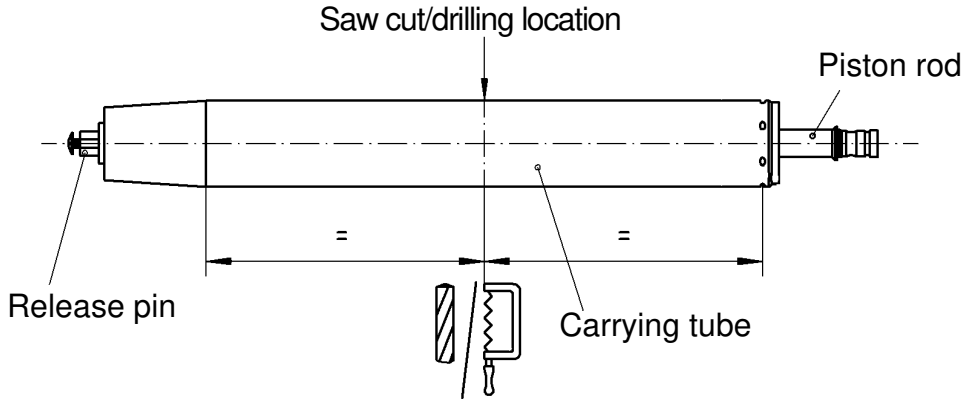

Press the release pin and completely extend the piston rod.

Saw cut/drilling location: Saw or drill the device between the start of the cone (carrying tube, release pin side) and carrying tube dinks (piston rod side)

CAUTION! - Triple tube device - min. cutting depth 8mm

III STAB-O-BLOC

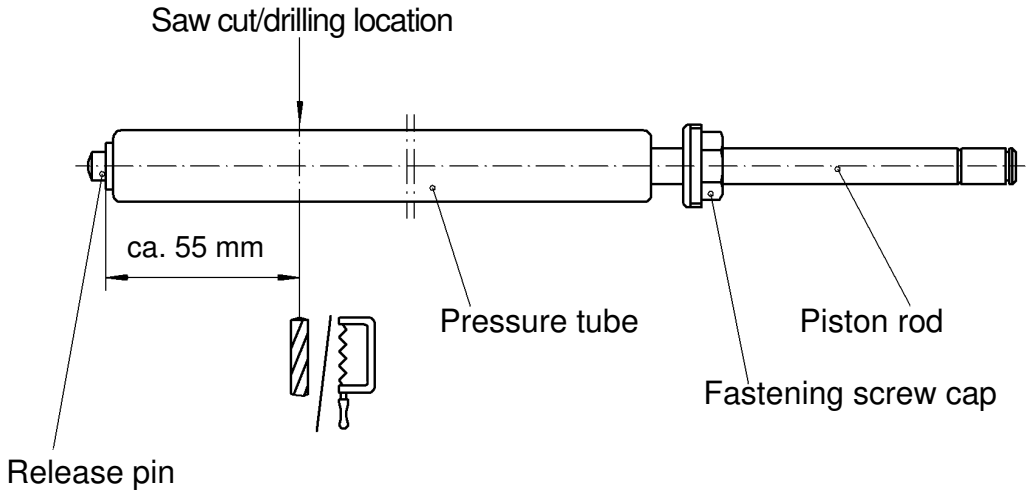

Press the release pin and completely extend the piston rod.
Saw cut/drilling location: Saw or drill the unit open about 55 mm from the bottom.

CAUTION! - Double tube device - min. cutting depth 5 mm.

We reserve all rights to this document, to any patents or patent registrations related hereto, and to the duplication, retransmission by third parties and misc. use. Any use of this document is not permitted without the written consent of STABILUS.

STABILUS GmbH
Wallersheimer Weg 100
D-56070 Koblenz
Postfach 201454, D-56014 Koblenz
Telefon: (0261) 8900-0
Telefax: (0261) 8900-204
E-Mail: Info@de.stabilus.com
http://www.stabilus.com

The print-out is not subject to the modification service.

Intended for internal and external use.

Disassembly and pressure discharge of STABILUS products prior to disposal

2.10. Model: HYDRO-BLOC

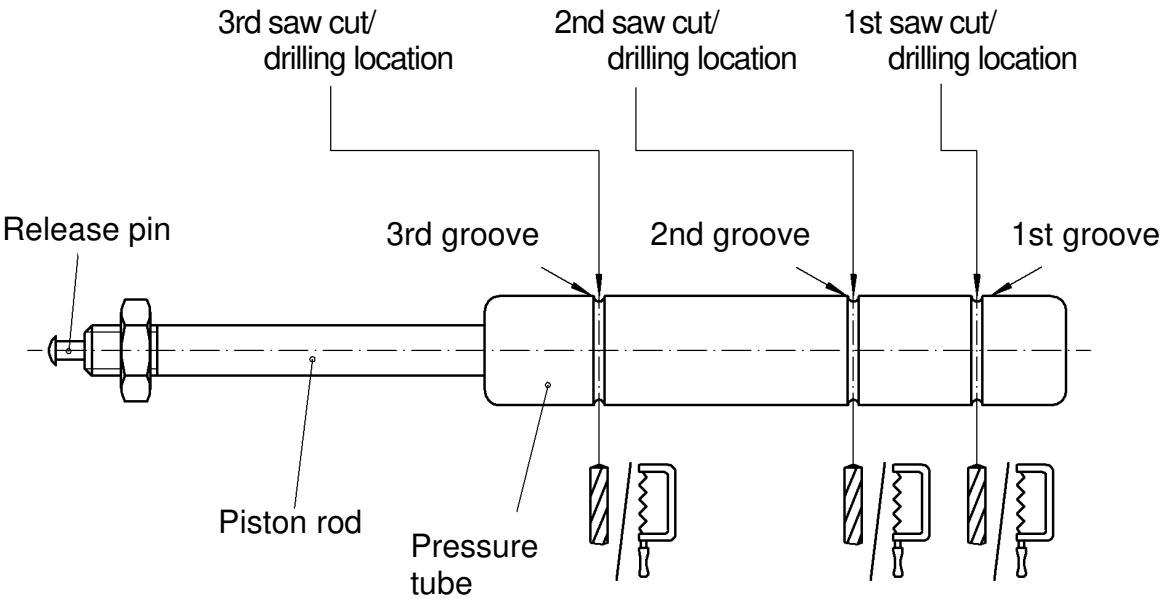

Saw cut/drilling location: Saw or drill the pressure tube in the first, second and third radial groove.

EN

DE: X | EN: X | ES: X | IT: X | PR: X | FR: X | RO: X

Preceding edition: 11.11.1993

We reserve all rights to this document, to any patents or patent registrations related hereto, and to the duplication, retransmission by third parties and misc. use. Any use of this document is not permitted without the written consent of STABILUS.

STABILUS GmbH
Wallersheimer Weg 100
D-56070 Koblenz
Postfach 201454, D-56014 Koblenz

Telefon: (0261) 8900-0
Telefax: (0261) 8900-204
E-Mail: Info@de.stabilus.com
http://www.stabilus.com

The print-out is not subject to the modification service.

Intended for internal and external use.

Disassembly and pressure discharge of STABILUS products prior to disposal

2.11. Model: HYDRO-LIFT

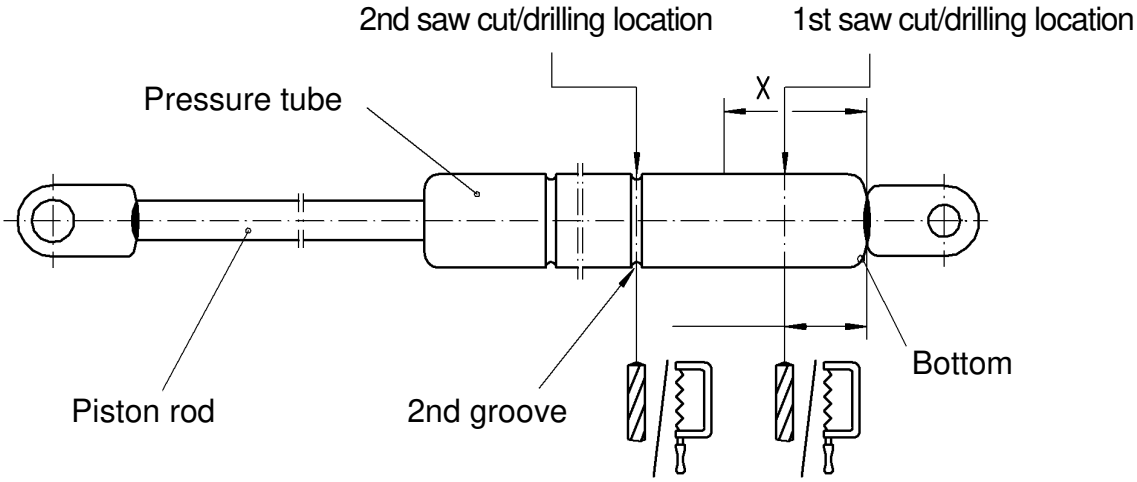

1st saw cut/drilling location: Saw or drill the pressure tube about 20 mm from the bottom.

2nd saw cut/drilling location: Saw or drill in the second radial groove from the piston rod end.

EN

DE: X | EN: X | ES: X | IT: X | PR: X | FR: X | RO: X

Preceding edition: 11.11.1993

We reserve all rights to this document, to any patents or patent registrations related hereto, and to the duplication, retransmission by third parties and misc. use. Any use of this document is not permitted without the written consent of STABILUS.

STABILUS GmbH
Wallersheimer Weg 100
D-56070 Koblenz
Postfach 201454, D-56014 Koblenz

Telefon: (0261) 8900-0
Telefax: (0261) 8900-204
E-Mail: Info@de.stabilus.com
http://www.stabilus.com

The print-out is not subject to the modification service.
Intended for internal and external use.

EN

2.12. Model: DORSTOP

The device must be brought to the completely extended position before degasing (sawing/drilling).

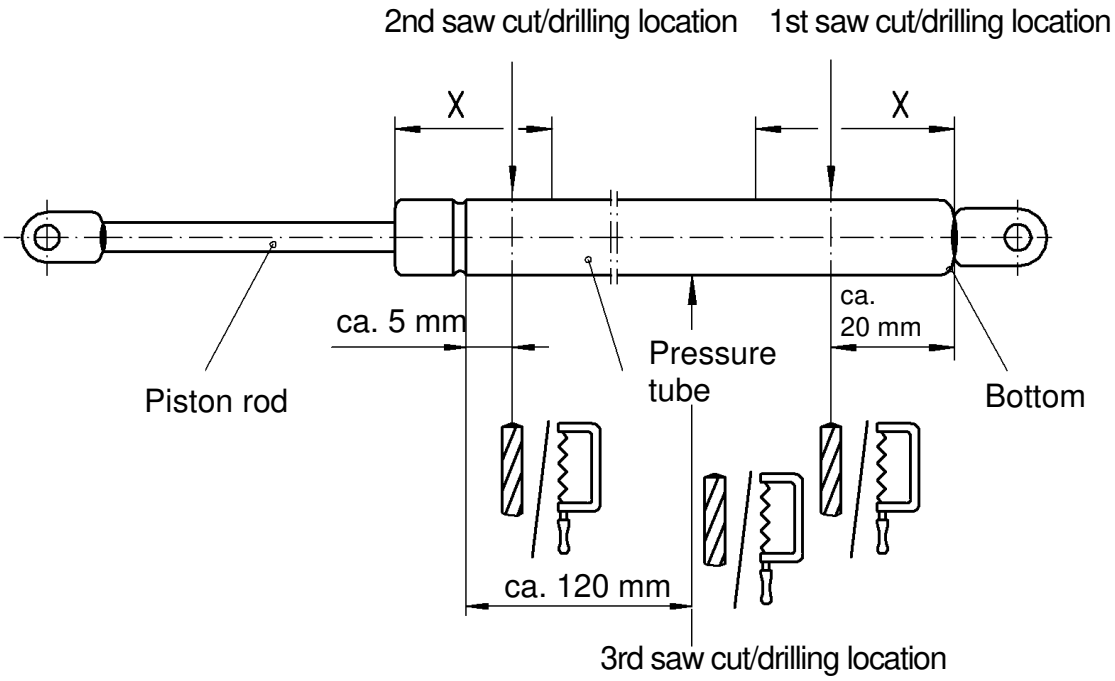

1st saw cut/drilling location:	Saw or drill the pressure tube about 20 mm from the bottom.
2nd saw cut/drilling location:	Saw or drill the pressure tube about 5 mm from the radial groove (between groove and tube bottom).
3rd saw cut/drilling location:	Saw or drill the pressure tube about 120 mm from the radial groove (between groove and tube bottom).

We reserve all rights to this document, to any patents or patent registrations related hereto, and to the duplication, retransmission by third parties and misc. use. Any use of this document is not permitted without the written consent of STABILUS.

STABILUS GmbH
Wallersheimer Weg 100
D-56070 Koblenz
Postfach 201454, D-56014 Koblenz

Telefon: (0261) 8900-0
Telefax: (0261) 8900-204
E-Mail: Info@de.stabilus.com
http://www.stabilus.com

Disassembly and pressure discharge of STABILUS products prior to disposal

2.13. Model: DORSTOP-console

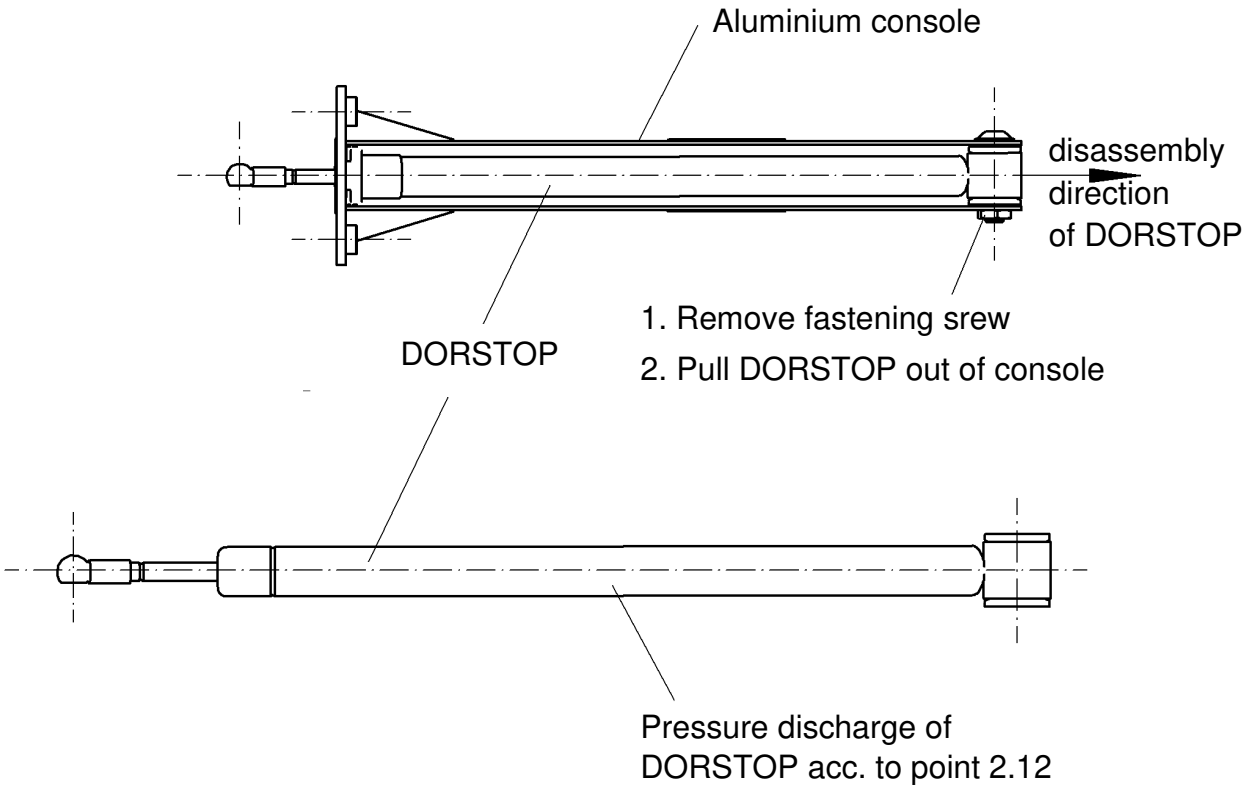

The print-out is not subject to the modification service.
Intended for internal and external use.

EN

DE: X | EN: X | ES: X | IT: X | PR:X | FR: X | RO: X

Preceding edition: 11.11.1993

Rev.: 20

We reserve all rights to this document, to any patents or patent registrations related hereto, and to the duplication, retransmission by third parties and misc. use. Any use of this document is not permitted without the written consent of STABILUS.

STABILUS GmbH
Wallersheimer Weg 100
D-56070 Koblenz
Postfach 201454, D-56014 Koblenz

Telefon: (0261) 8900-0
Telefax: (0261) 8900-204
E-Mail: Info@de.stabilus.com
http://www.stabilus.com

The print-out is not subject to the modification service.

Intended for internal and external use.

EN

2.14. Model: POWERISE Spindle Drive with pressure spring

The following 2 steps must be carried out in the indicated sequence.

Step 1:

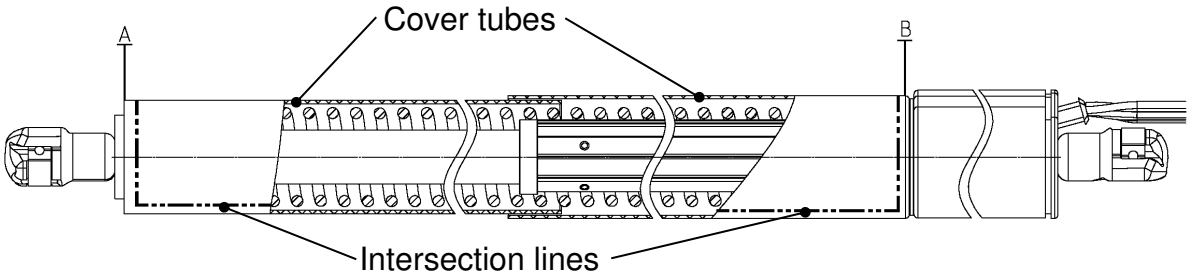

Cut open the cover tubes lengthwise using a suitable cutting tool (e.g. knife) and remove by opening the tube to expose the coil spring completely.

CAUTION!
The mechanical spring is pre-loaded between positioning points A and B

Step 2:

Clamp the complete spindle drive by way of the mechanical spring in a vice with prism jaws.

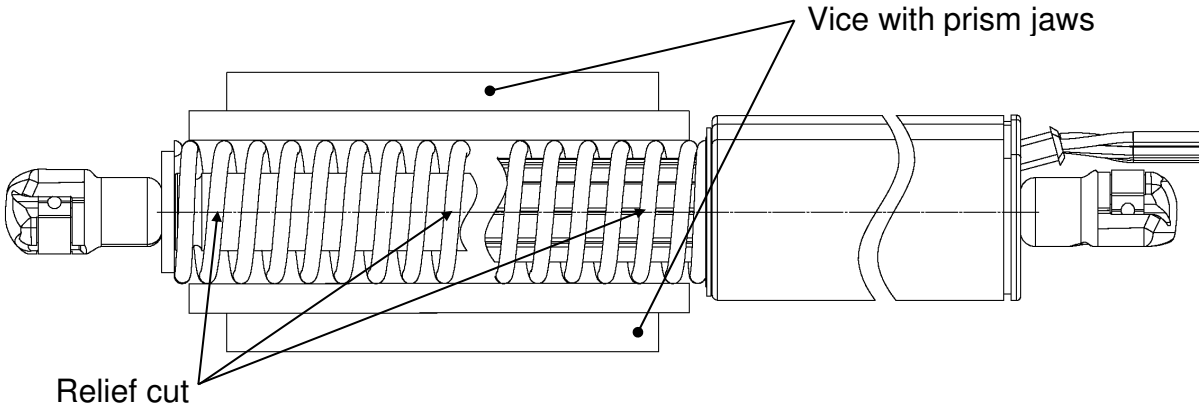

Cut at least 80% of the turns of the mechanical spring using an angle grinder with a cutting disc. Carry out a separating cut parallel to the spindle drive axis.

CAUTION!
When severing the spring coils beware of sudden impact force on the cutting disc.
Cutting work may only be carried out by qualified personnel.
Observe the safety instructions!

We reserve all rights to this document, to any patents or patent registrations related hereto, and to the duplication, retransmission by third parties and misc. use. Any use of this document is not permitted without the written consent of STABILUS.

STABILUS GmbH
Wallersheimer Weg 100
D-56070 Koblenz
Postfach 201454, D-56014 Koblenz

Telefon: (0261) 8900-0
Telefax: (0261) 8900-204
E-Mail: Info@de.stabilus.com
http://www.stabilus.com

The print-out is not subject to the modification service.

Intended for internal and external use.

Disassembly and pressure discharge of STABILUS products prior to disposal

The same procedure applies to axially parallel and angular drives.

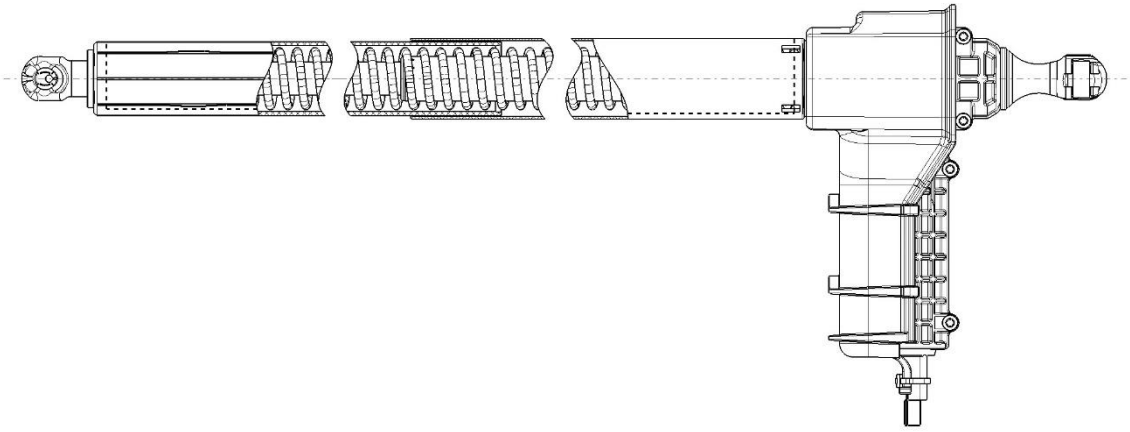

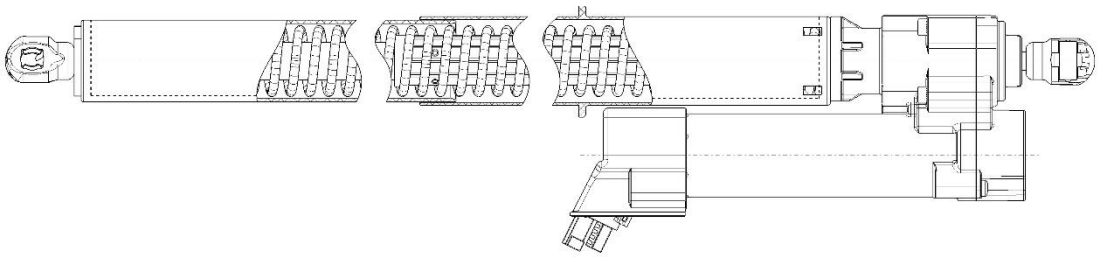

EN

DE: X | EN: X | ES: X | IT: X | PR:X | FR: X | RO: X

Preceding edition: 11.11.1993

We reserve all rights to this document, to any patents or patent registrations related hereto, and to the duplication, retransmission by third parties and misc. use. Any use of this document is not permitted without the written consent of STABILUS.

STABILUS GmbH
Wallersheimer Weg 100
D-56070 Koblenz
Postfach 201454, D-56014 Koblenz

Telefon: (0261) 8900-0
Telefax: (0261) 8900-204
E-Mail: Info@de.stabilus.com
http://www.stabilus.com

The print-out is not subject to the modification service.

Intended for internal and external use.

EN

2.15. Model: POWERISE Spindle Drive with tension spring

Method:

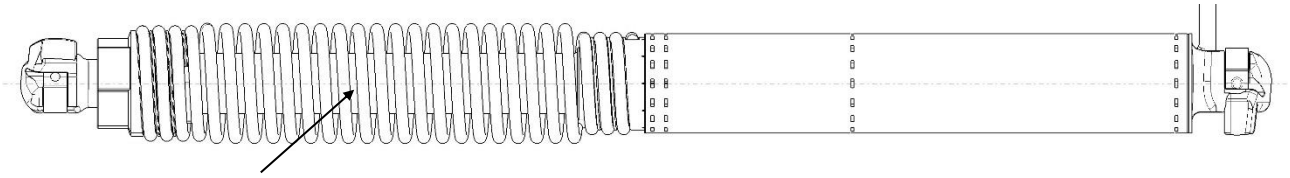

Relief cut, approx in the middle of the spring

Cut the middle turn on the mechanical spring using an angle grinder with a cutting disc. Carry out a separating cut parallel to the spindle drive axis.

The same procedure applies to axially parallel and angular drives

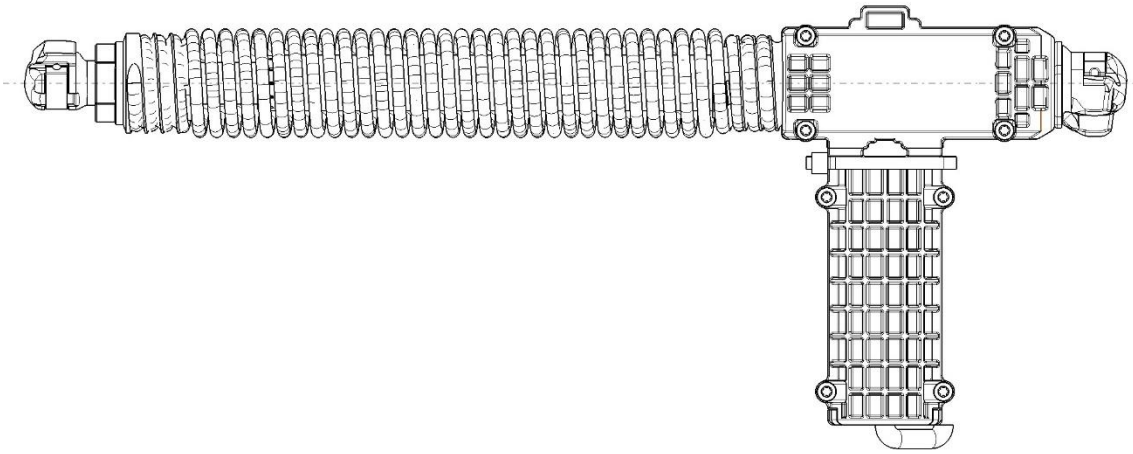

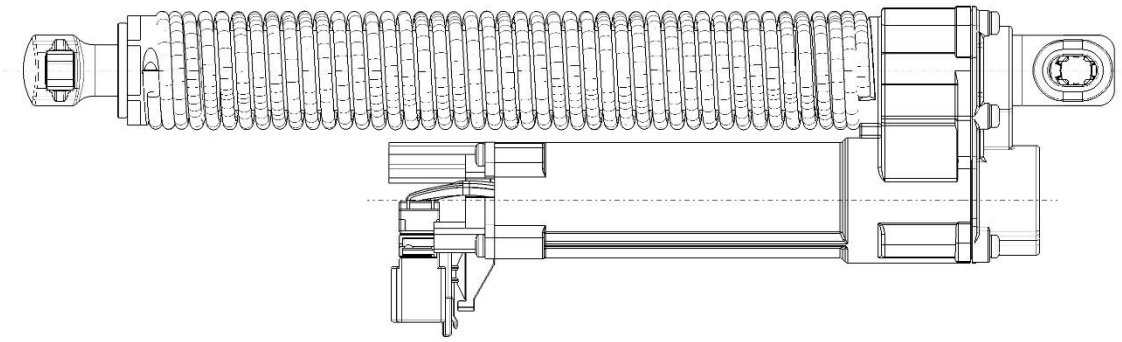

DE: X | EN: X | ES: X | IT: X | PR:X | FR: X | RO: X

Preceding edition: 11.11.1993

We reserve all rights to this document, to any patents or patent registrations related hereto, and to the duplication, retransmission by third parties and misc. use. Any use of this document is not permitted without the written consent of STABILUS.

STABILUS GmbH
Wallersheimer Weg 100
D-56070 Koblenz
Postfach 201454, D-56014 Koblenz

Telefon: (0261) 8900-0
Telefax: (0261) 8900-204
E-Mail: Info@de.stabilus.com
http://www.stabilus.com

The print-out is not subject to the modification service.
Intended for internal and external use.

EN

2.16. Model: POWERISE Spindle drive paradox

Method:

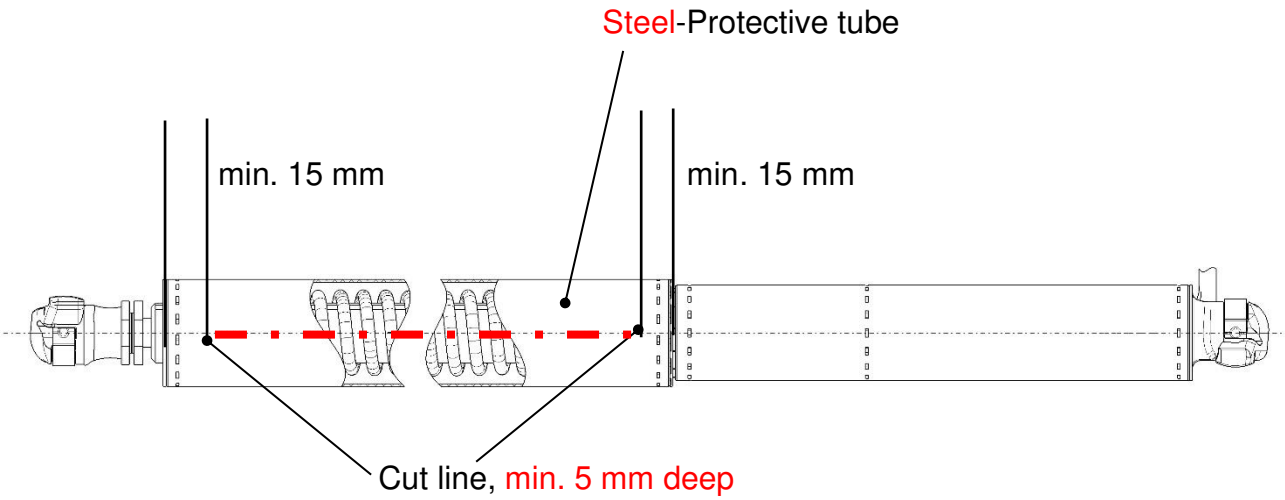

Cut through the steel protective tube and mechanical spring using an angle grinder with a cutting disc, cutting depth at least 5 mm. Carry out a separating cut parallel to the spindle drive axis. Make the cut up to approx. 15mm from the tube end.

ATTENTION!
Mechanical spring is pre-tensioned in the steel protective tube.

ATTENTION!
When cutting through the spring coils, sudden impact load on the cutting disc.
Cutting work may only be carried out by qualified personnel.
Observe safety regulations!

DE: X | EN: X | ES: X | IT: X | PR:X | FR: X | RO: X
Preceding edition: 11.11.1993

We reserve all rights to this document, to any patents or patent registrations related hereto, and to the duplication, retransmission by third parties and misc. use. Any use of this document is not permitted without the written consent of STABILUS.

STABILUS GmbH
Wallersheimer Weg 100
D-56070 Koblenz
Postfach 201454, D-56014 Koblenz

Telefon: (0261) 8900-0
Telefax: (0261) 8900-204
E-Mail: Info@de.stabilus.com
http://www.stabilus.com

The print-out is not subject to the modification service.

Intended for internal and external use.

EN

DE: X | EN: X | ES: X | IT: X | PR:X | FR: X | RO: X

Preceding edition: 11.11.1993

2.17. Model: other POWERISE

2.17.1. Disposal of POWERISE bowden cable system with Dorstop

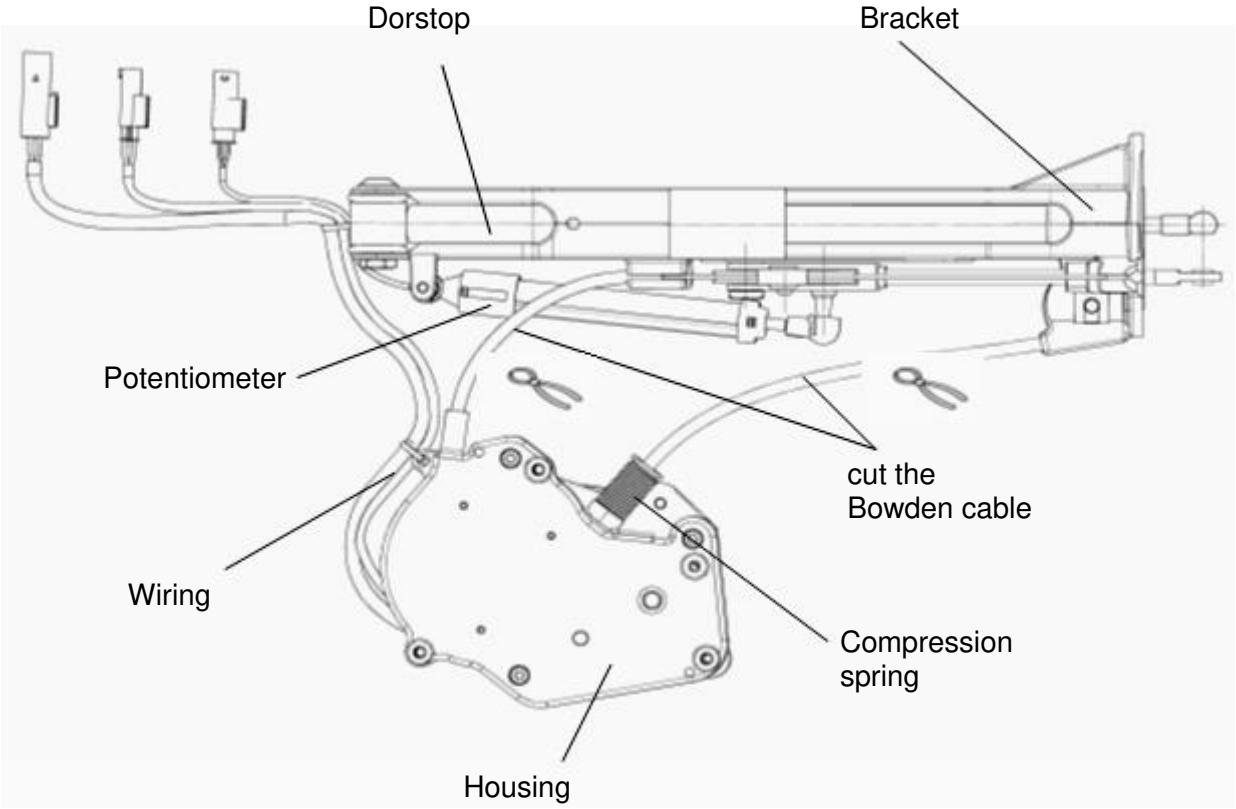

All system components can be disassembled into their individual components by means of separating the threaded and pressfit connections. The individual components must be disposed of based on material and according to any and all local regulations.

Caution when separating the bowden cables, system is pretensioned (compression spring).

Dispose of DORSTOP devices according to the corresponding section of this specification.

We reserve all rights to this document, to any patents or patent registrations related hereto, and to the duplication, retransmission by third parties and misc. use. Any use of this document is not permitted without the written consent of STABILUS.

STABILUS GmbH
Wallersheimer Weg 100
D-56070 Koblenz
Postfach 201454, D-56014 Koblenz

Telefon: (0261) 8900-0
Telefax: (0261) 8900-204
E-Mail: Info@de.stabilus.com
http://www.stabilus.com

The print-out is not subject to the modification service.

Intended for internal and external use.

EN

DE: X | EN: X | ES: X | IT: X | PR:X | FR: X | RO: X

Preceding edition: 11.11.1993

2.17.2. Disposal of POWERISE with Direct Drive

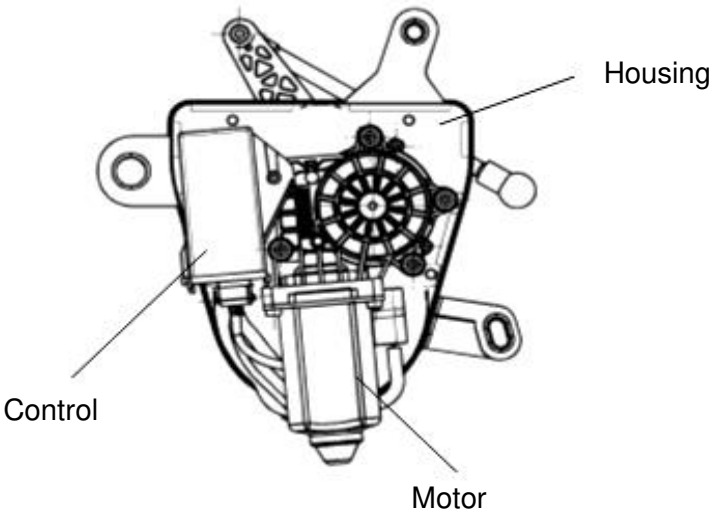

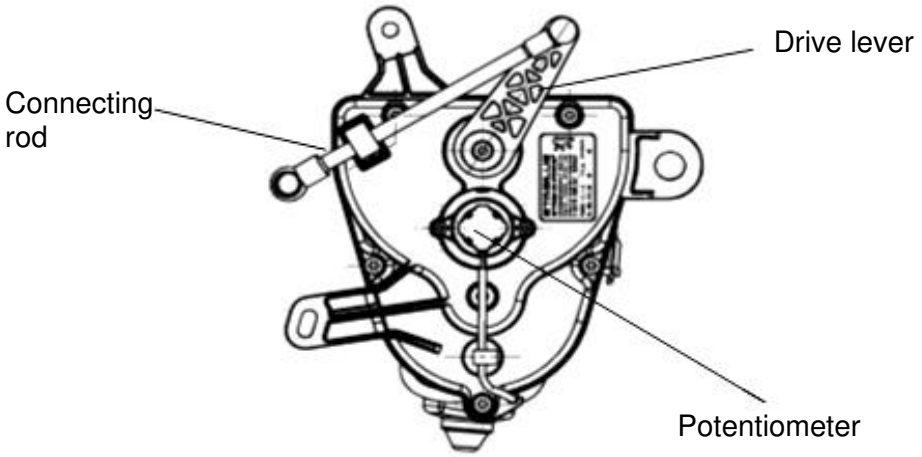

All system components can be disassembled into their individual components by means of separating the threaded and pressfit connections. The individual components must be disposed of based on material and according to any and all local regulations.

We reserve all rights to this document, to any patents or patent registrations related hereto, and to the duplication, retransmission by third parties and misc. use. Any use of this document is not permitted without the written consent of STABILUS.

STABILUS GmbH
Wallersheimer Weg 100
D-56070 Koblenz
Postfach 201454, D-56014 Koblenz

Telefon: (0261) 8900-0
Telefax: (0261) 8900-204
E-Mail: Info@de.stabilus.com
http://www.stabilus.com

The print-out is not subject to the modification service.

Intended for internal and external use.

EN

DE: X | EN: X | ES: X | IT: X | PR:X | FR: X | RO: X

Preceding edition: 11.11.1993

2.17.3. Disposal of POWERISE bowden cable system with Lift-o-Mat

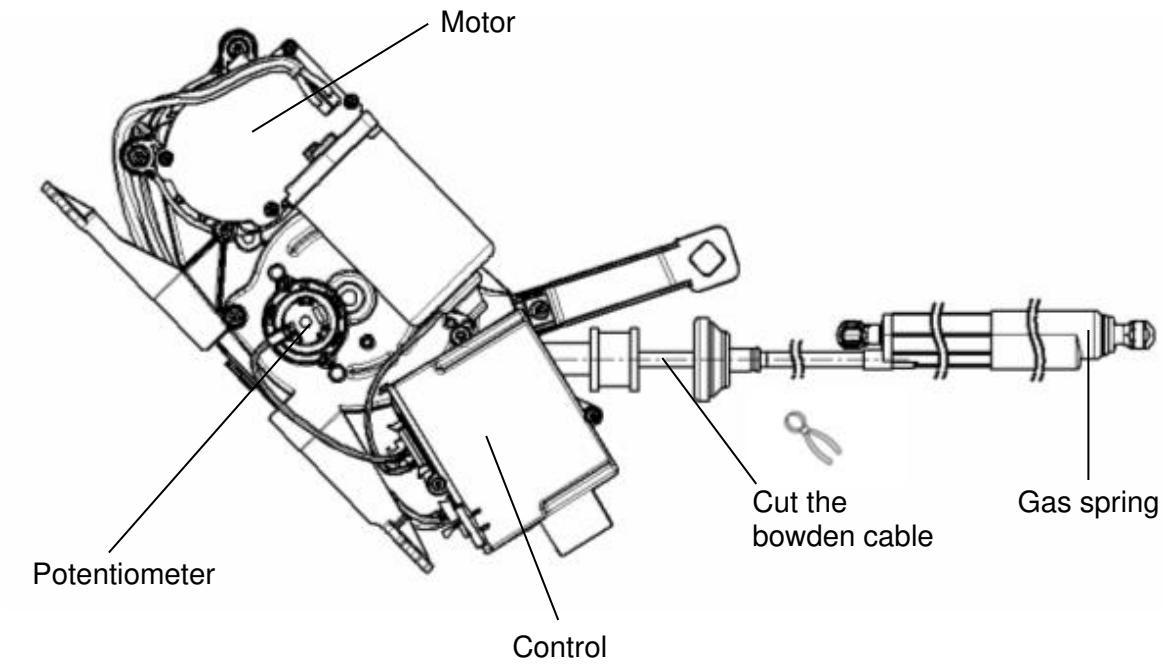

All system components can be disassembled into their individual components by means of separating the threaded and pressfit connections. The individual components must be disposed of based on material and according to any and all local regulations.

Caution when separating the bowden cables, system is pretensioned (torsion spring in housing).

Disposal of Lift-o-Mat according to the corresponding section of this specification.

We reserve all rights to this document, to any patents or patent registrations related hereto, and to the duplication, retransmission by third parties and misc. use. Any use of this document is not permitted without the written consent of STABILUS.

STABILUS GmbH
Wallersheimer Weg 100
D-56070 Koblenz
Postfach 201454, D-56014 Koblenz

Telefon: (0261) 8900-0
Telefax: (0261) 8900-204
E-Mail: Info@de.stabilus.com
http://www.stabilus.com

The print-out is not subject to the modification service.

Intended for internal and external use.

Disassembly and pressure discharge of STABILUS products prior to disposal

2.18. Model: Rotary Damper

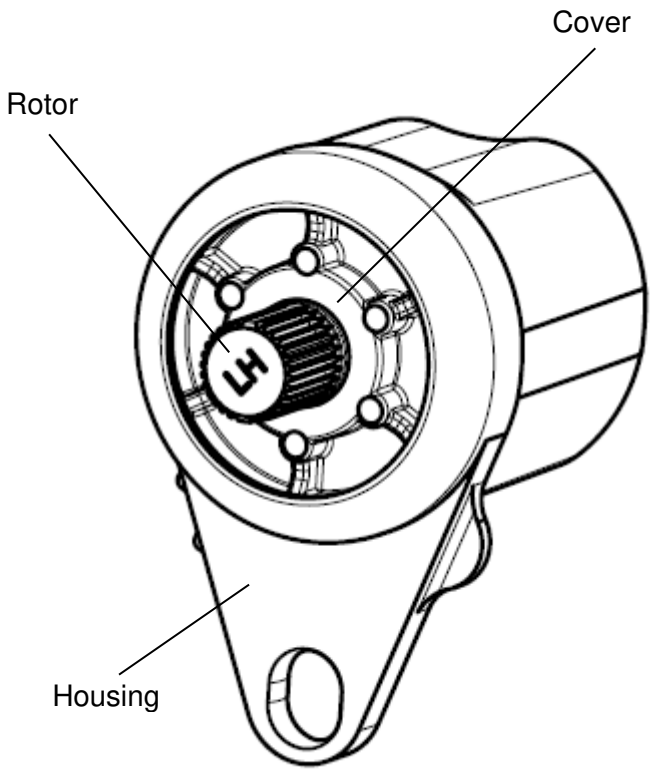

The unit is pressureless and filled with silicone oil. It is not necessary to open the device. If necessary, the product can be disassembled into the individual materials by opening the housing.

Either the product and the individual parts can be disposed, in compliance with the respective local regulations.

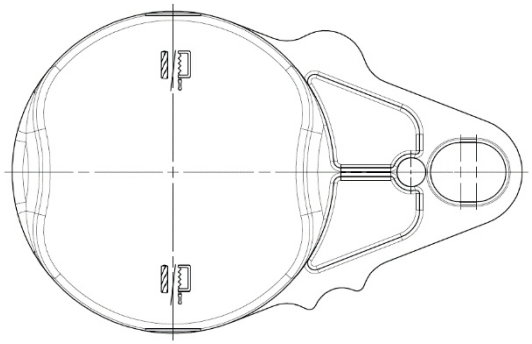

EN

DE: X | EN: X | ES: X | IT: X | PR:X | FR: X | RO: X

Preceding edition: 11.11.1993

Rev.: 20

We reserve all rights to this document, to any patents or patent registrations related hereto, and to the duplication, retransmission by third parties and misc. use. Any use of this document is not permitted without the written consent of STABILUS.

STABILUS GmbH
Wallersheimer Weg 100
D-56070 Koblenz
Postfach 201454, D-56014 Koblenz

Telefon: (0261) 8900-0
Telefax: (0261) 8900-204
E-Mail: Info@de.stabilus.com
http://www.stabilus.com

The print-out is not subject to the modification service.
Intended for internal and external use.
EN
DE: X | EN: X | ES: X | IT: X | PR:X | FR: X | RO: X
Preceding edition: 11.11.1993

2.19. Model: Gas damper

Products under high pressure may present hazards under certain circumstances. To exclude such hazards, gas dampers to be disposed of must be degassed before disposal without (intermediate) storage, i.e., immediately after their removal, in accordance with the provisions of this Stabilus specification.

The following general instructions must be observed when degassing. Non-observance can lead to hazards and is not permitted.

The following generally applies:

1. The pressure tube must be clamped between two prisms without being deformed.

2. For degassing, the pressure tube must be slowly sawn open at the **TWO** indicated points with a handsaw or drilled out with a drill having a diameter of approx. 3 mm: 5-15 mm upstream of the DRRO end (pressure tube connection side) and 10-20 mm downstream of the first bead (piston rod side)

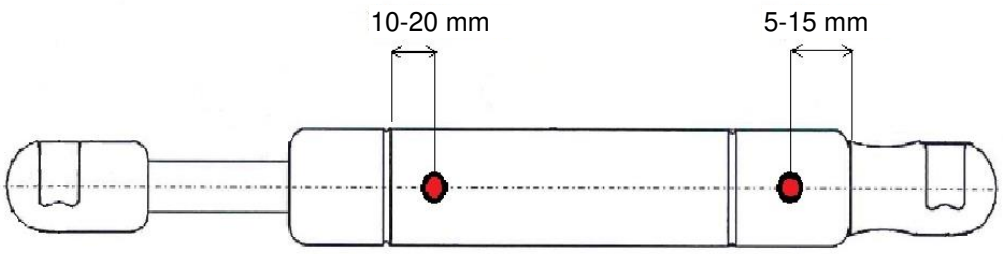

3. Since chips and oil can spray away from the sawing or drilling site due to the high internal pressure, suitable measures must be taken to protect persons before sawing or drilling (eye and face protection, covering of the saw cut).

4. The depressurized device must be disposed of in accordance with the relevant (waste) regulations. Gas dampers are filled with oil.
   Dispose of used oil according to relevant (waste) legal regulations.
   Do not allow used oil to enter soil or water.

5. If disposal according to this regulation is not possible, it is recommended that disposal should be coordinated with the supplying plant.

We reserve all rights to this document, to any patents or patent registrations related hereto, and to the duplication, retransmission by third parties and misc. use. Any use of this document is not permitted without the written consent of STABILUS.

STABILUS GmbH
Wallersheimer Weg 100
D-56070 Koblenz
Postfach 201454, D-56014 Koblenz

Telefon: (0261) 8900-0
Telefax: (0261) 8900-204
E-Mail: Info@de.stabilus.com
http://www.stabilus.com

The print-out is not subject to the modification service.
Intended for internal and external use.
EN
DE: X | EN: X | ES: X | IT: X | PR:X | FR: X | RO: X
Preceding edition: 11.11.1993

2.20. Model: LOM X

Attention! Double tube product with three pressure volumes.

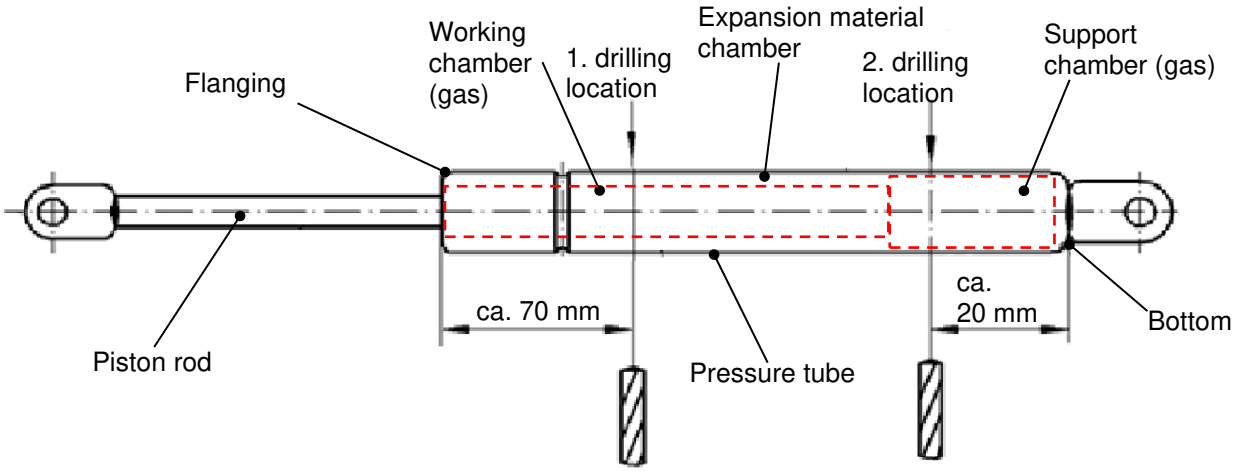

Personal protective equipment:

As chips, oil and expansion material can spray away from the drilling site, suitable measures must be taken to protect the operators' eyes and face.

1. A protective google shall be worn.
2. The drilling must be covered with a protective shield.

Drill out - Observe the sequence!

1. Drilling: Drill out the pressure tube approx. 70mm from the flanging the minimum drilling depth is 8 mm to degas the pressure in the working chamber.

Attention!
After drilling through the first tube an expansion material escapes. After drilling through the second tume, the working chamber degases.

2. Drilling: Drill out the tube about 20 mm from the bottom to degas the supporting chamber.

We reserve all rights to this document, to any patents or patent registrations related hereto, and to the duplication, retransmission by third parties and misc. use. Any use of this document is not permitted without the written consent of STABILUS.

STABILUS GmbH
Wallersheimer Weg 100
D-56070 Koblenz
Postfach 201454, D-56014 Koblenz

Telefon: (0261) 8900-0
Telefax: (0261) 8900-204
E-Mail: Info@de.stabilus.com
http://www.stabilus.com

The print-out is not subject to the modification service.

Intended for internal and external use.

EN

DE: X | EN: X | ES: X | IT: X | PR:X | FR: X | RO: X

Preceding edition: 11.11.1993

Tests of an unpressurized device:

An inserted piston rod does not necessarily mean that the device is completely degassed.

A LOM X is depressurized if the piston rod can be pushed in without any effort AND there is a hole in the support space.

After the product has been depressurised, the product or the components of the product can be disposed in compliance with the respective local regulations.

We reserve all rights to this document, to any patents or patent registrations related hereto, and to the duplication, retransmission by third parties and misc. use. Any use of this document is not permitted without the written consent of STABILUS.

STABILUS GmbH
Wallersheimer Weg 100
D-56070 Koblenz
Postfach 201454, D-56014 Koblenz

Telefon: (0261) 8900-0
Telefax: (0261) 8900-204
E-Mail: Info@de.stabilus.com
http://www.stabilus.com